THIS DRAWING IS UNPUBLISHED. RELEASED FOR PUBLICATION
© COPYRIGHT — BY TE CONNECTIVITY CORPORATION. ALL RIGHTS RESERVED.

| LOC | DIST |
|---|---|
| AA | 22 |

REVISIONS

| # | LTR | DESCRIPTION | DATE | BY | APVD |
|---|---|---|---|---|---|
| | C | REV PER ECO-09-022155 | 09OCT2009 | VL | LR |
| | C1 | REV PER ECO-10-000444 | 20JAN2010 | KK | HMR |
| | D | ECO-11-013430 | 30MAY2011 | EL | LR |

MECHANICAL:

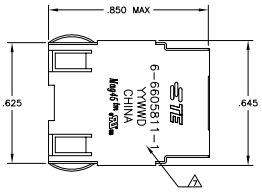


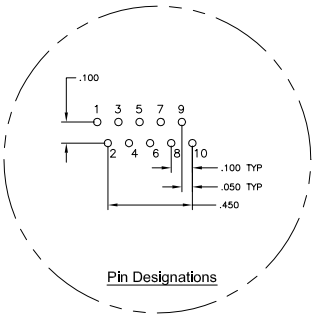


Pin Designations

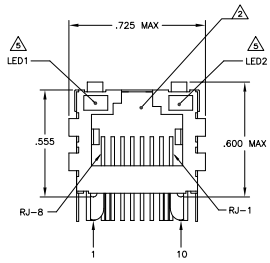


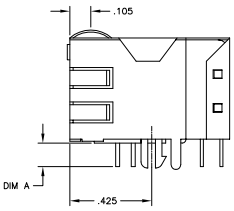


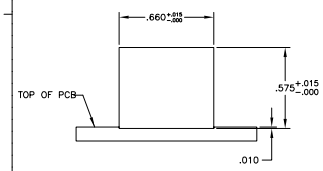


Suggested Panel Cutout

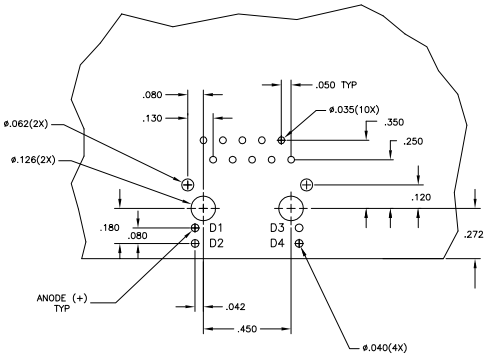


Suggested PCB Layout
(Component Side)

7G01P1 SERIES GIGABIT CIRCUIT

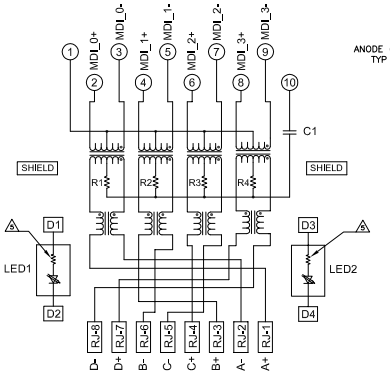


C1=1000pF, 2kV CAPACITOR
R1-R4 = 75 OHMS, 1/16 W RESISTORS

1. MATERIALS:
-HOUSING - THERMOPLASTIC PET POLYESTER FLAMMABILITY RATING UL 94V-0.
-SHIELD - .010" THICK, C26800 BRASS PREPLATED WITH 30µINCH MIN SEMI-BRIGHT NICKEL, SOLDER TABS POST DIPPED WITH 100µINCH MIN SAC SOLDER.
-MOD JACK CONTACTS - 0.0157" x 0.018" PHOSPHOR BRONZE, 50µINCH MIN OVERALL NICKEL UNDERPLATE, WITH SELECT 50µINCH MIN HARD GOLD FINISH PLATE. SOLDERTAILS WITH 100µINCH MIN MATTE TIN AND/OR SAC SOLDER DIP.
-LIGHT EMITTING DIODE(LED) - DIFFUSED EPOXY LENS, .020" x .020" CARBON STEEL WIREFRAME LEADS PRE-PLATED WITH 80µINCH SILVER OVER 40µINCH NICKEL UNDERPLATE OVER 40µINCH COPPER UNDERPLATE, POST-PLATED WITH 100µINCH MIN MATTE TIN AND/OR SAC SOLDER DIP OR PURE TIN SOLDER DIP.

2. RJ45 JACK CAVITY CONFORMS TO FCC RULES AND REGULATIONS PART 68, SUB PART F.

3. MAGNETICS
-IMPEDANCE: 100 OHMS
-TURNS RATIO (CHIP:CABLE): 1:1 ALL FOUR PAIRS
-OPEN CIRCUIT INDUCTANCE (OCL): 350uH MIN @100kHz, 0.1VRMS, 8mADC BIAS FROM 0°C TO 70°C, ALL FOUR PAIRS
-ALL FOUR PAIRS BI-DIRECTIONAL
-PERFORMANCE @ 25°C:
INSERTION LOSS (IL): 1.1dB MAX FROM 0.5MHz TO 100MHz
RETURN LOSS (RL): 18dB MIN FROM 0.5MHZ TO 40MHz
12-20LOG(f/80)dB MIN FROM 40.1MHz TO 100MHz
CROSSTALK ATTENUATION: 35dB MIN FROM 0.5MHz TO 40MHz
33-20xLOG(f/50)dB MIN FROM 40.1MHz TO 100MHz
COMMON MODE REJECTION RATIO (CMRR): 30dB MIN FROM 0.5MHz TO 100MHz
-ISOLATION VOLTAGE:2250VDC (MAX) FOR 60 SECONDS WITH A RISE TIME OF 500V/SEC.

4. OPERATING TEMPERATURE: FROM 0°C - +70°C.

5. LED WITH 250 OHM RESISTORS,LED IS DRIVEN WITH 5V VOLTAGE AND THE MAX OPERATING CURRENT IS 20mA.
LED COLOR : DOMINANT WAVELENGTH (λD): GREEN 568 nm TYP @ VF=5V
FORWARD CURRENT (IF): GREEN 12 mA TYP @ VF=5V
DOMINANT WAVELENGTH (λD): YELLOW 588 nm TYP @ VF=5V
FORWARD CURRENT (IF): YELLOW 13 mA TYP @ VF=5V

6. THE MAGNETICS ARE SYMMETRICAL AND SUPPORT AUTO-MDIX.

7. TE CONNECTIVITY LOGO, PART NUMBER, DATE CODE, COUNTRY OF ORIGIN AND AGENCY APPROVAL MARKING IN APPROXIMATE LOCATION SHOWN.

8. THESE PARTS ARE RECOMMENDED FOR WAVE SOLDERING PROCESS, PREHEAT TEMPERATURE IS 120°C TO 160°C, 120 SECONDS TO 180 SECONDS, PEAK WAVE SOLDERING TEMPERATURE IS 260°C MAX, 10 SECONDS MAX.

9. OBSOLETE PARTS: OBSOLETE CIS STREAMLINING PER D.RENAUD/D.SINISI

| | DIM A | 2KV DECOUPLING CAPACITOR | LED1 | LED2 | PART NUMBER |
|---|---|---|---|---|---|
| | .145±.010 | YES | GREEN | GREEN | 6-6605811-1 |
| OBSOLETE | .145±.010 | YES | YELLOW | GREEN | ~~5-6605811-2~~ |
| | .145±.010 | YES | GREEN | YELLOW | 5-6605811-1 |
| | .165±.010 | YES | GREEN | GREEN | 2-6605811-1 |

THIS DRAWING IS A CONTROLLED DOCUMENT.
DIMENSIONS: INCHES
UNLESS OTHERWISE SPECIFIED: 0 PLC ± - ; 1 PLC ± .0?? ; 2 PLC ± .0?? ; 3 PLC ± .??? ; 4 PLC ± - ; ANGLES ± -
MATERIAL
FINISH
DR T. VARELA — 09MAR09
CH D. FAROLF — 09MAR09
APV D. FAROLF — 09MAR09
PRODUCT SPEC 108-2100
APPLICATION SPEC —
WEIGHT —
TE Connectivity
NAME 1X1 MAG45(TM), MODULAR JACK, 7G1P1 GIGABIT SCHEMATIC, 7G01 SERIES CIRCUIT, SHIELDED, DECOUPLING CAPACITOR, WITH RESISTOR LEDS
SIZE A1 CAGE CODE 00779 DRAWING NO C-6605811
RESTRICTED TO —
CUSTOMER DRAWING
SCALE 1:1 SHEET 1 OF 1 REV D

Downloaded from Elcodis.com electronic components distributor