THIS DRAWING IS UNPUBLISHED. RELEASED FOR PUBLICATION 2009
© COPYRIGHT 2009 BY TYCO ELECTRONICS CORPORATION. ALL RIGHTS RESERVED.

LOC	DIST
A1	-

REVISIONS

P	LTR	DESCRIPTION	DATE	DWN	APVD
	A5	ECR-09-023155	22OCT2009	VG	AR
	A6	ECR-10-009777	17MAY2010	SR	AR

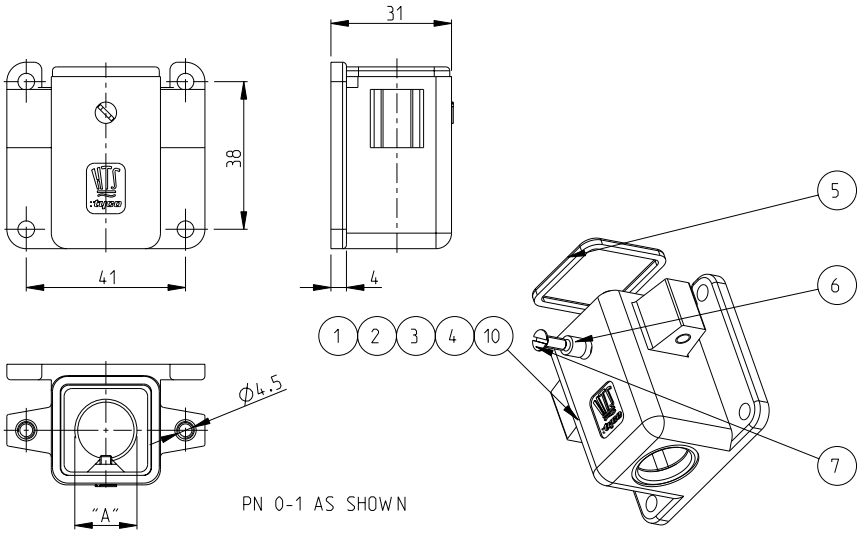

PN 0-1 AS SHOWN

Notes

1 SUITABLE HOUSINGS: SERIES EMV, SIZE 1
CUSTOMER DRAWING 1102700, 1106402, 1106200

2 STANDARDS:
DIN EN 61984, DIN EN 60664-1

3 SUR TEC 650 CHROMIT AL TCP PASSIVATION

4 TOOL:
SLOTTED SCREW DRIVER 4.0x0.8

5 VARNISH ON INSIDE AREA NOT NECESSARY

6 PACKAGING:
10 SETS IN A CARTON, PRE-MOUNTED

0-5	0-4	0-3	0-2	0-1	DESCRIPTION	"A"	MATERIAL	COLOR/SURFACE	NOTE	ITEM
1					ANGLED BULKHEAD HOUSING		ALU	BLACK	SERIES EMV-K WITHOUT LOGO	10
	-	x	x	-	GLUE	-	CYANACRYLAT	BLACK	LOCTITE 480	9
	x	-	-	x	GLUE	-	CYANACRYLAT	NATURAL	LOCTITE 401	8
1	1	1	1	1	SCREW, SLOTTED COUNTERS. FLAT HEAD	-	STAINL. STEEL	BLANK	M3x8 DIN EN ISO 2009	7
1	1	1	1	1	HOSE SECTION	-	FKM	BLACK	SERIES EMV / HIP Ø3x1x4.5	6
1	1	1	1	1	PROGFILE SEAL	-	FKM	BLACK	SERIES EMV / HIP	5
	-	1	-	-	ANGLED BULKHEAD HOUSING	M20	ALU	BLACK SEE NOTE 3	SERIES EMV-K	4
	1	-	-	-	ANGLED BULKHEAD HOUSING	M20	ALU	GREY	SERIES EMV-K	3
	-	-	1	-	ANGLED BULKHEAD HOUSING	M16	ALU	BLACK SEE NOTE 3	SERIES EMV-K	2
	-	-	-	1	ANGLED BULKHEAD HOUSING	M16	ALU	GREY	SERIES EMV	1

PN/QTY

PARTS LIST (PER ONE UNIT)

PART NO.	ORDERING TEXT
0-5	EMV-K.3/4.SG-N
0-4	EMV.3/4.SG.1.M20.G
0-3	EMV-K.3/4.SG.1.M20.G
0-2	EMV-K.3/4.SG.1.M16.G
0-1	EMV.3/4.SG.1.M16.G

THIS DRAWING IS A CONTROLLED DOCUMENT FOR TYCO ELECTRONICS CORPORATION. IT IS SUBJECT TO CHANGE AND THE CONTROLLING ENGINEERING ORGANIZATION SHOULD BE CONTACTED FOR THE LATEST REVISION.

DIMENSIONS: mm

TOLERANCES UNLESS OTHERWISE SPECIFIED:
0 PLC ±-
1 PLC ±-
2 PLC ±-
3 PLC ±-
4 PLC ±-
ANGLES ±1°

MATERIAL -
FINISH -

DWN V.GLUMM 26AUG2009
CHK H.Braun 26AUG2009
APVD T.Schnurpfeil 26AUG2009
PRODUCT SPEC -
APPLICATION SPEC -
WEIGHT -

Tyco Electronics
Tyco Electronics AMP GmbH
64625 Bensheim (Germany)

NAME ANGLED BULKHEAD HOUSING ASS'Y
SIDE ENTRY, SERIES EMV, SIZE 1
-

SIZE A3 | CAGE CODE 00779 | DRAWING NO C-1106401 | RESTRICTED TO -

CUSTOMER DRAWING | SCALE 1:1 | SHEET 1 OF 1 | REV A6

AMP 1470-19 REV 31MAR2000

Pro/ENGINEER DRAWING

Downloaded from Elcodis.com electronic components distributor