THIS DRAWING IS UNPUBLISHED. RELEASED FOR PUBLICATION 2001.
© COPYRIGHT 2001 . ALL RIGHTS RESERVED.

LOC	DIST
AD	00

REVISIONS

P	LTR	DESCRIPTION	DATE	DRN	APVD
	A	REVISED PER ECO-11-013132	13JUL2011	HMR	MH

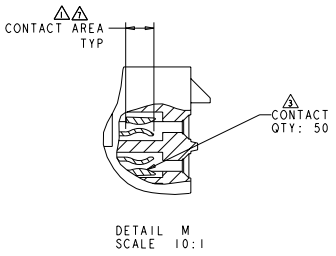

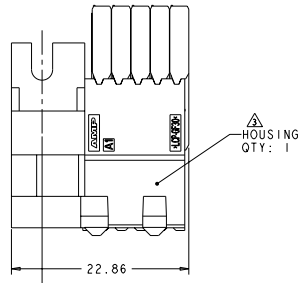

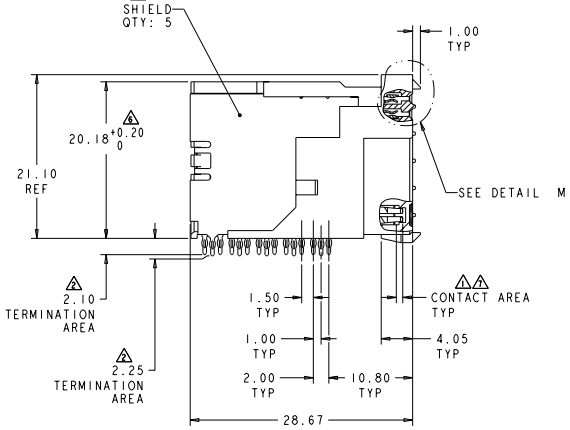

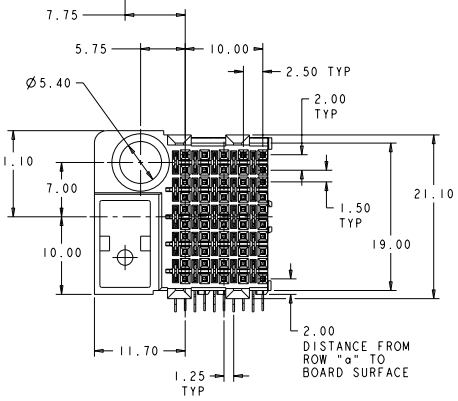

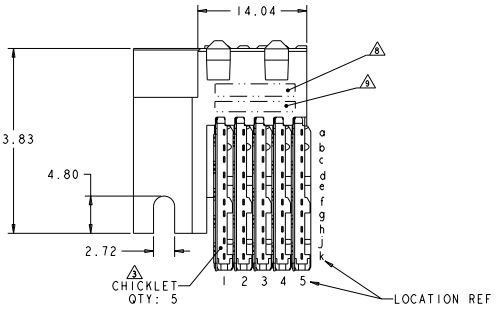

1. CONTACT MATING AREA MEETS THE PERFORMANCE REQUIREMENTS OF TE CONNECTIVITY PRODUCT SPECIFICATION 108-1957; BASED ON TELCORDIA GR-1217-CORE, APPLICATIONS IN UNCONTROLLED ENVIRONMENTS.
2. 0.76µm MIN TIN OVER 1.27µm MIN NICKEL
3. MATERIAL: CONTACT - COPPER ALLOY
   SHIELD - PHOSPHOR BRONZE
   HOUSING - LCP, UL94V-0
   CHICKLET - GLASS FILLED POLYESTER
4. REFERENCE APPLICATION SPEC 114-13020 FOR RECOMMENDED PLATED THRU HOLE DIAMETER AND PLATING THICKNESS.
5. DATUM AND BASIC DIMENSION ESTABLISHED BY CUSTOMER.
6. SEATING HEIGHT TO BOARD SURFACE.
7. CONTACT AREA LUBRICATED WITH BELLCORE APROVED LUBRICANT. TECHNICAL REFERENCE: GR-1217-CORE, ISSUE 1, NOVEMBER 1995.
8. DATE CODE
9. PART NUMBER

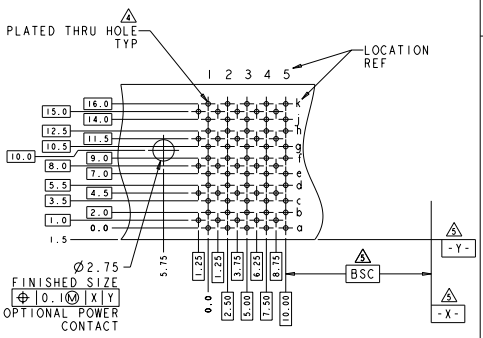

RECOMMENDED PRINTED CIRCUIT BOARD LAYOUT
COMPONENT SIDE OF PRINTED CIRCUIT BOARD

5120875-1
PART NUMBER

THIS DRAWING IS A CONTROLLED DOCUMENT.
DIMENSIONS: MM
TOLERANCES UNLESS OTHERWISE SPECIFIED:
0 PLC ±-
1 PLC ±0.7
2 PLC ±0.13
3 PLC ±0.05
ANGLES ±-
MATERIAL: 3
FINISH: SOLDER TAIL 2
CONTACT 1

DRN	D.CABRO	09DEC04
CHK	R.PATTERSON	09DEC04
APV	R.PATTERSON	09DEC04
PRODUCT SPEC	108-1957	
APPLICATION SPEC	114-13020	
WEIGHT	-	
CUSTOMER DRAWING		

TE Connectivity

NAME: RECEPTACLE ASSEMBLY, 50 POSITION, UNIVERSAL GUIDE PIN, LEFT HAND, 10 ROW, DUAL BEAM, Z-PACK HS3

SIZE	CAGE CODE	DRAWING NO	RESTRICTED TO
A1	00779	C-5120875	-

SCALE 4:1 SHEET 1 OF 1 REV A

4005 13JUL11
Pro/ENGINEER DRAWING

Downloaded from Elcodis.com electronic components distributor