THIS DRAWING IS UNPUBLISHED. RELEASED FOR PUBLICATION -.-.-
© COPYRIGHT - By -. ALL RIGHTS RESERVED.

UOC	DIST
FT	0

REVISIONS

P	LTR	DESCRIPTION	DATE	DWN	APVD
	AE3	REVISED PER ECO-11-004820	11MAR11	RK	HMR

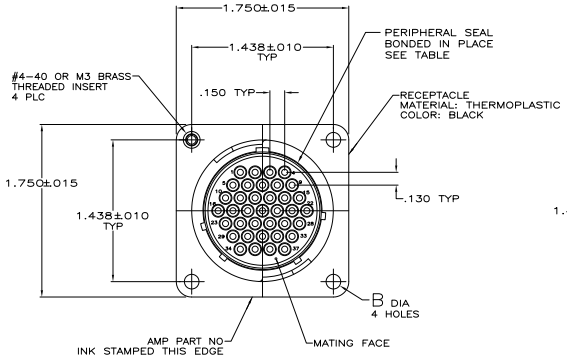

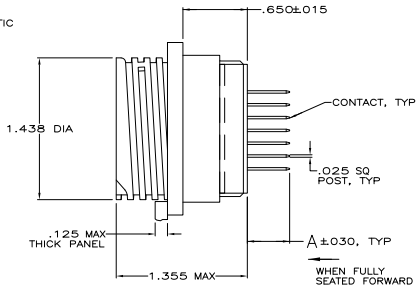

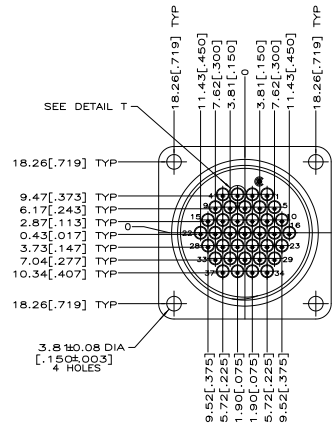

1. CONNECTOR WILL ACCEPT POSTED TYPE III+ PIN CONTACTS.
2. CONTACT BODY: SELECT GOLD OVER NICKEL. CONTACT POST: TIN-LEAD PER MIL-T-10727 OVER COPPER PER MIL-C-14550A.
3. RECOMMENDED PC BOARD HOLE SIZE FOR CONTACT POST: 1.02±0.08[.040±.003] DIA.
4.
5. CONTACT BODY: SELECT GOLD OVER NICKEL. CONTACT POST: TIN OVER COPPER.
6. POSITIONS LOADED WITH CONTACTS: 1-4, 10-17, 19-22, 24, 25, 29, 30, 32, 33.
7. POSITIONS LOADED WITH CONTACTS: 1-20. 22-28, 30-37
8. OBSOLETE PARTS: OBSOLETE CIS STREAMLINING PER D.RENAUD/D.SINISI

	M3 INSERTS	4-40 INSERTS	PERIPHERAL SEAL	B	A	PART NUMBER
7	NO	NO	NO	.150±.003	.220	2-206934-3
	NO	NO	YES	.150±.003	.119	2-206934-2
	NO	NO	NO	.150±.003	.119	2-206934-1
5,8 OBSOLETE	NO	YES	YES	-	.618	2-206934-0
5	NO	NO	NO	.150±.003	.618	1-206934-9
5	NO	NO	NO	.150±.003	.429	1-206934-8
5	NO	YES	YES	-	.119	1-206934-7
PRELIMINARY	NO	NO	YES	.150±.003	.429	1-206934-5
	NO	YES	NO	-	.618	1-206934-4
	NO	YES	NO	-	.220	1-206934-3
6 PRELIMINARY	NO	NO	NO	.150±.003	.429	1-206934-2
5	NO	NO	NO	.150±.003	.220	1-206934-1
PRELIMINARY	YES	NO	YES	-	.119	1-206934-0
	NO	YES	YES	-	.119	206934-9
	NO	NO	NO	.150±.003	.618	206934-7
	NO	NO	NO	.150±.003	.429	206934-6
	NO	NO	NO	.150±.003	.119	206934-5
OBSOLETE	NO	YES	NO	-	.220	206934-4
OBSOLETE	NO	NO	NO	.158±.001	.618	206934-3
OBSOLETE	NO	NO	NO	.158±.001	.429	206934-2
	NO	NO	NO	.150±.003	.220	206934-1

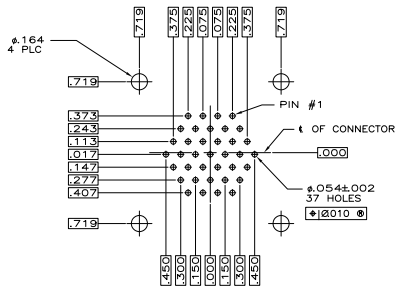

RECOMMENDED P.C. BOARD LAYOUT

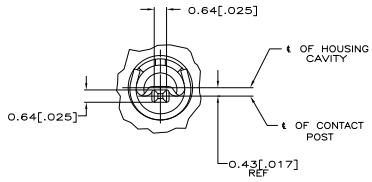

DETAIL T
SCALE 10:1
TYP

THIS DRAWING IS A CONTROLLED DOCUMENT.

DIMENSIONS: mm

TOLERANCE UNLESS OTHERWISE SPECIFIED: 0 PLC ± - ; 1 PLC ± - ; 2 PLC ± - ; 3 PLC ± .005 ; 4 PLC ± - ; ANGLES ± -

MATERIAL: SEE CALLOUT

FINISH: CONTACT: 5

DWN J.GALLUCCI 9-30-91
CHK W.G.LENKER 6-14-92
APVD K.BEAVER 6-14-92
PRODUCT SPEC 108-10024
APPLICATION SPEC -
WEIGHT -

TE Connectivity

NAME: RECEPTACLE ASSEMBLY, POSTED, STD SEX, SERIES 1, 23-37, CPC

SIZE A1 | CAGE CODE 00779 | DRAWING NO C-206934 | RESTRICTED TO -

CUSTOMER DRAWING | SCALE 2:1 | SHEET 1 OF 1 | REV AE3

4MOS (3/11)

Downloaded from Elcodis.com electronic components distributor