THIS DRAWING IS UNPUBLISHED. RELEASED FOR PUBLICATION ,19 .
© COPYRIGHT 19 BY AMP INCORPORATED. ALL RIGHTS RESERVED.

LOC	DIST
G	16

REVISIONS

#	LTR	DESCRIPTION	DATE	DWN	APVD
	0	RELEASED, WAS 92-4072-2329-3	030CT95	KL	EO
	A	ADD -2, PROP. #99-4072-002	27MAY99	KL	GI
	B	REV PER EC# OK40-0138-00	7-7-00	PC	GI

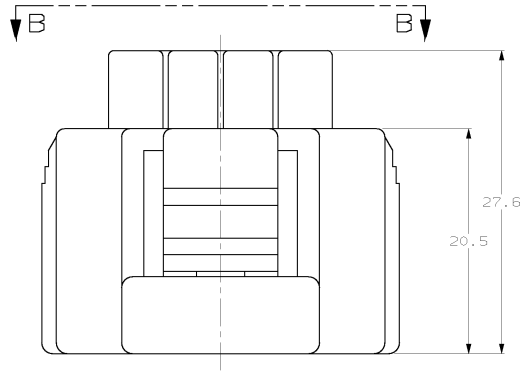

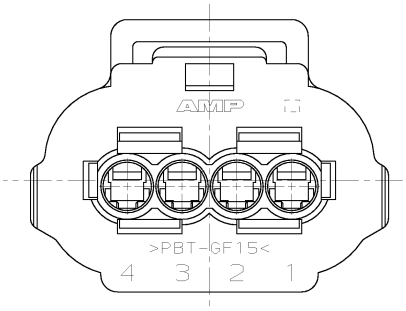

VIEW B-B

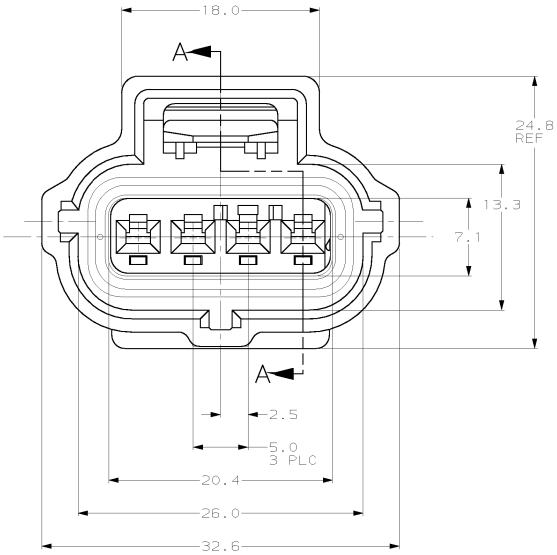

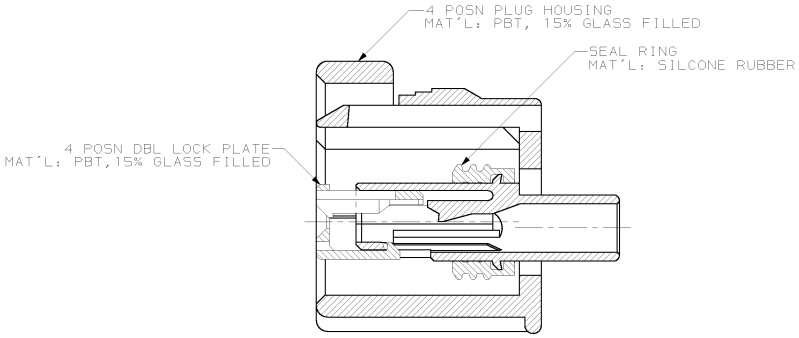

SECTION A-A

COLOR	PART NUMBER
GRAY	184050-2
BLACK	184050-1

184050

THIS DRAWING IS A CONFIDENTIAL DOCUMENT AND AMP INCORPORATED. IT IS SUBJECT TO CHANGE AND THE CONTROLLING ENGINEERING ORGANIZATION SHOULD BE CONTACTED FOR THE LATEST REVISION.

DIMENSIONS: MM

TOLERANCES UNLESS OTHERWISE SPECIFIED:
0 PLC ±-
1 PLC ±0.2
2 PLC ±-
3 PLC ±-
4 PLC ±-
ANGLES ±1°

MATERIAL –
FINISH –

DWN CD LYTLE 030CT95
CHK E. OSMANDEL 14AUG97
APVD E. OSMANDEL 14AUG97
PRODUCT SPEC –
APPLICATION SPEC –
WEIGHT –

CUSTOMER DRAWING

AMP Incorporated
Harrisburg, PA 17105-3608

NAME 1 X 4 PLG ASY KEY C-C3

SIZE	CAGE CODE	DRAWING NO
A2	00779	C-184050

SCALE	SHEET	OF	REV
4:1	1	1	B

AMP 1471-9 REV 10/93

28-MAY-99 08:26:27 amp24764/home/amp24764/edmmod

Downloaded from Elcodis.com electronic components distributor