THIS DRAWING IS UNPUBLISHED. RELEASED FOR PUBLICATION 19
© COPYRIGHT 20 . ALL RIGHTS RESERVED.

LOC	DIST
AA	22

REVISIONS

#	LTR	DESCRIPTION	DATE	DRN	APVD
	C2	REVISED PER ECO-11-005033	04MAY11	RK	HMR

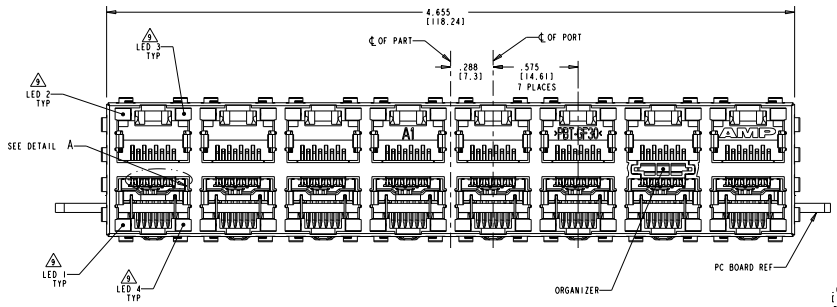

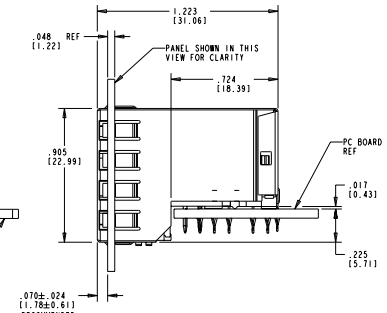

P/N 6116317-1 SHOWN

1. HOUSING: PBT POLYESTER, BLACK, UL 94V-O.
   TERMINALS: 0.30 THICK PHOS BRONZE PLATED WITH 1.27µm MINIMUM THICK HARD GOLD IN LOCALIZED AREA AND 2µm MINIMUM THICK MATTE TIN IN ACTION PIN COMPLIANT PIN TERMINAL AREA OVER 1.27µm MINIMUM THICK NICKEL UNDERPLATE.
   SHIELD: 0.25 THICK COPPER ALLOY PLATED WITH 2.03µm MINIMUM BRIGHT TIN OVER1.27µm MINIMUM NICKEL.
   GROUND CLIPS: 0.25 THICK COPPER ALLOY PLATED WITH 2.03µm MINIMUM MATTE TIN OVER1.27µm MINIMUM NICKEL.
   LIGHT EMITTING DIODE (LED): DIFFUSED EPOXY LENS, 12.95 CARBON STEEL WIREFRAME LEADS PLATED WITH 8.89µm TIN/COPPER OVER 2.03µm SILVER OVER 1.02µm COPPER OVER 3.56µm NICKEL OVER 1.02µm COPPER UNDERPLATE.
   LED ACTION PIN COMPLIANT PIN CONTACTS: 0.30 THICK BRASS PLATED WITH 2µm MINIMUM MATTE TIN.
2. JACK CAVITY CONFORMS TO FCC RULES AND REGULATIONS, PART 68 SUBPART F.
3. ALL DIMENSIONS ARE NOMINAL UNLESS OTHERWISE SPECIFIED.
4. TWO LEDS PER PORT, SIZE .079 X .118, SEE TABLE.
5. DRILLED HOLE DIA = .040±.001.
   COPPER THICKNESS = .001-.003.
   TIN THICKNESS = .0003 MIN.
6. DATUMS AND BASIC DIMENSIONS ESTABLISHED BY CUSTOMER.
7. DATE CODE LOCATED ON REAR OF PART APPROXIMATELY AS SHOWN.
8. THESE FOUR SIDE PCB ACTION PIN GROUNDS AND CORRESPONDING PCB HOLES ARE REQUIRED ONLY ON 6116317-2, 6116317-3, 6116317-5, 6116317-6, 6116317-7,-9 AND 1--0.
9. SUGGESTED OPERATING CURRENT FOR LEDS IS 20 mA.

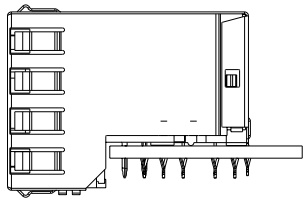

P/N 6116317-1, -8
SCALE 4:1

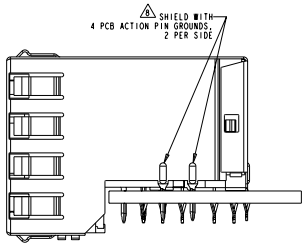

P/N 6116317-2, -5, -6, -7,
SCALE 4:1

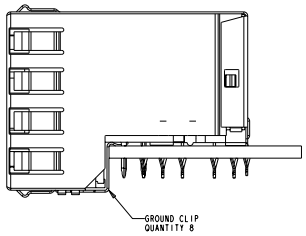

P/N 6116317-4
SCALE 4:1

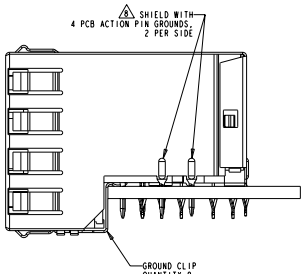

P/N 6116317-3,-9, -1/0
SCALE 4:1

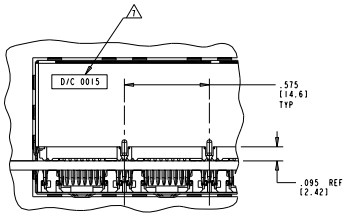

PARTIAL BACK VIEW

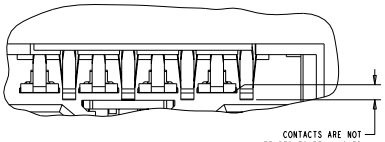

DETAIL A
SCALE 15:1
TYPICAL

RED/GREEN	RED/GREEN	RED/GREEN	RED/GREEN	1-6116317-0
GREEN/YELLOW	GREEN/YELLOW	RED/GREEN	RED/GREEN	6116317-9
GREEN/YELLOW	GREEN/YELLOW	RED/GREEN	RED/GREEN	6116317-8
GREEN	GREEN	YELLOW	YELLOW	6116317-7
YELLOW	YELLOW	GREEN	GREEN	6116317-6
GREEN/YELLOW	GREEN/YELLOW	GREEN/YELLOW	GREEN/YELLOW	6116317-5
GREEN	GREEN	GREEN	GREEN	6116317-4
GREEN	GREEN	GREEN	GREEN	6116317-3
GREEN	GREEN	GREEN	GREEN	6116317-2
GREEN	GREEN	GREEN	GREEN	6116317-1
LED #4 (LOWER-RIGHT)	LED #3 (UPPER-RIGHT)	LED #2 (UPPER-LEFT)	LED #1 (LOWER-LEFT)	PART NO.

8	4 (8)	4 (8)	1-6116317-0
8	4 (8)	4 (8)	6116317-9
NONE	NONE	NONE	6116317-8
NONE	4 (8)	4 (8)	6116317-7
NONE	4 (8)	4 (8)	6116317-6
NONE	4 (8)	4 (8)	6116317-5
8	NONE	NONE	6116317-4
8	4 (8)	4 (8)	6116317-3
NONE	4 (8)	4 (8)	6116317-2
NONE	NONE	NONE	6116317-1
GROUND CLIPS	SIDE PCB ACTION PIN GNDS		PART NUMBER

THIS DRAWING IS A CONTROLLED DOCUMENT.

DIMENSIONS: INCHES[mm]

TOLERANCES UNLESS OTHERWISE SPECIFIED:
0 PLC ±:
1 PLC ±:
2 PLC ±:
3 PLC ±.005 [0.13]
4 PLC ±.005 [0.13]
ANGLES ±:

MATERIAL (1)

FINISH (1)

DRN 23JUN2005
CHK VARELA 23JUN2005
CHK WESTMAN 23JUN2005
APVD 23JUN2005
NAME S FLICKINGER

PRODUCT SPEC 108-1854
APPLICATION SPEC 114-2160
WEIGHT .1 :77.2 grams

TE Connectivity

STACKED MODULAR JACK ASSEMBLY,
2X8 WITH LEDS, 8 POSITION, SHIELDED
PANEL GROUND, OFFSET, CAT 5

SIZE A1 | CAGE CODE 00779 | DRAWING NO C-6116317 | RESTRICTED TO -

CUSTOMER DRAWING | SCALE 3:1 | SHEET 1 OF 3 | REV C2

4005 12/11/11

PrvENGINEER DRAWING

Downloaded from Elcodis.com electronic components distributor

THIS DRAWING IS UNPUBLISHED. RELEASED FOR PUBLICATION 19
© COPYRIGHT 20 . ALL RIGHTS RESERVED.

LOC	DIST
AA	22

REVISIONS

P	LTR	DESCRIPTION	DATE	DWN	APVD
	-	SEE SHEET 1	-	-	-

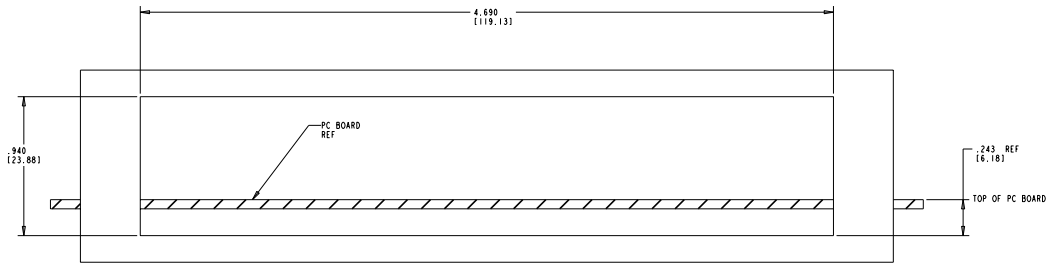

RECOMMENDED PANEL CUT-OUT

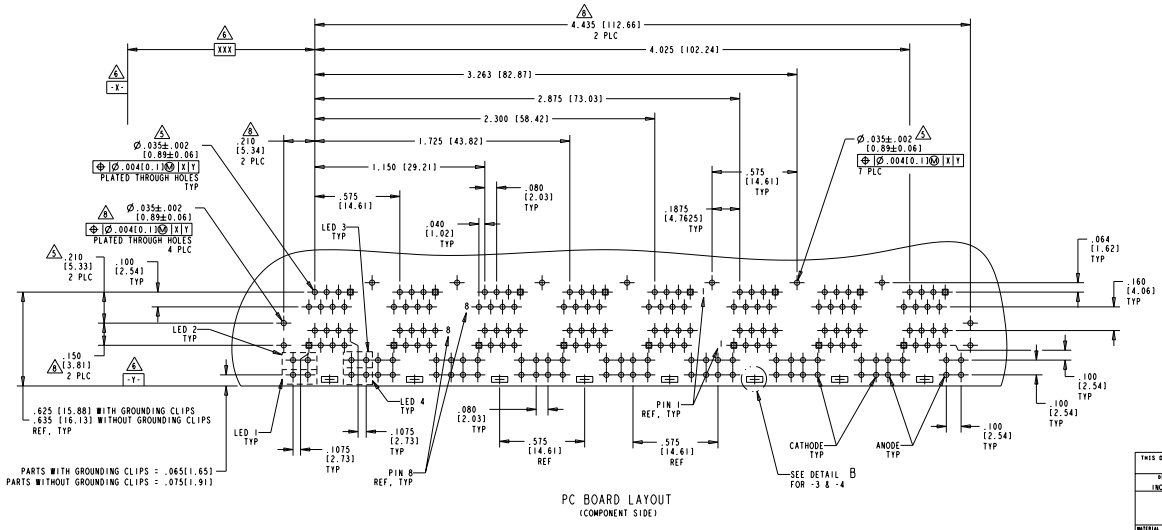

PC BOARD LAYOUT
(COMPONENT SIDE)

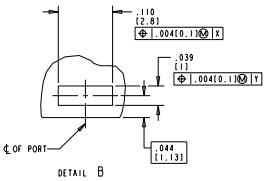

DETAIL B
THESE PLATED PADS REQUIRED FOR 6116317-3 & -4
PRODUCTS WITH GROUNDING CLIPS
SCALE 10:1
8 PLACES

THIS DRAWING IS A CONTROLLED DOCUMENT.

DIMENSIONS: INCHES[mm]

TOLERANCE UNLESS OTHERWISE SPECIFIED:
0 PLC ±:
1 PLC ±:
2 PLC ±:
3 PLC ±.005 [0.13]
4 PLC ±.003 [0.13]
ANGLES ±:

MATERIAL :
FINISH :

DWN VARELA 23JUN2005
CHK VARELA 23JUN2005
APVD WESTMAN 23JUN2005
MFG S. FLICKINGER

PRODUCT SPEC 108-1854
APPLICATION SPEC 114-2160
WEIGHT 77.2 grams

TE Connectivity

NAME STACKED MODULAR JACK ASSEMBLY, 2X8 WITH LEDS, 8 POSITION, SHIELDED PANEL GROUND, OFFSET, CAT 5

SIZE A1 | CAGE CODE 00779 | DRAWING NO C-6116317 | RESTRICTED TO -

CUSTOMER DRAWING | SCALE 3:1 | SHEET 2 OF 3 | REV C2

Downloaded from Elcodis.com electronic components distributor

THIS DRAWING IS UNPUBLISHED. RELEASED FOR PUBLICATION 19
© COPYRIGHT 20 . ALL RIGHTS RESERVED.

LOC	DIST
AA	22

REVISIONS

#	LTR	DESCRIPTION	DATE	DWN	APVD
	-	SEE SHEET 1	-	-	-

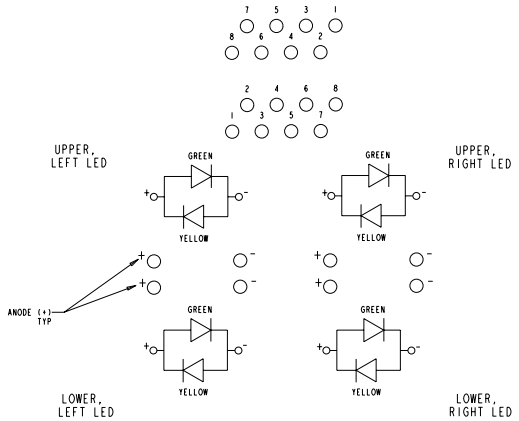

BI-COLOR LED SCHEMATIC FOR 6116317-5

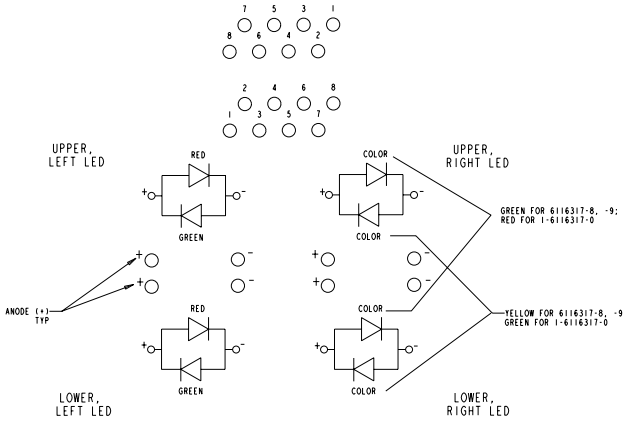

BI-COLOR LED SCHEMATIC FOR 6116317-8, -9, -1/0

THIS DRAWING IS A CONTROLLED DOCUMENT.

DIMENSIONS: INCHES[mm]

TOLERANCES UNLESS OTHERWISE SPECIFIED:
0 PLC ±-
1 PLC ±-
2 PLC ±-
3 PLC ±.005 [0.13]
4 PLC ±.005 [0.13]
ANGLES ±-

MATERIAL -
FINISH -

DWN	23JUN2005	
CHK	YARELA 23JUN2005	
APVD	WESTMAN 23JUN2005	
	S. FLICKINGER 23JUN2005	

TE Connectivity

NAME: STACKED MODULAR JACK ASSEMBLY, 2X8 WITH LEDS, 8 POSITION, SHIELDED PANEL GROUND, OFFSET, CAT 5

PRODUCT SPEC: 108-1854
APPLICATION SPEC: 114-2160
WEIGHT: 77.2 grams

SIZE A1 | CAGE CODE 00779 | DRAWING NO C-6116317 | RESTRICTED TO -

CUSTOMER DRAWING | SCALE 3:1 | SHEET 3 OF 3 | REV C.2

4005 43111

Downloaded from Elcodis.com electronic components distributor