THIS DRAWING IS UNPUBLISHED. RELEASED FOR PUBLICATION 19
© COPYRIGHT ALL RIGHTS RESERVED.

LOC	DIST
AR	00

REVISIONS

P	LTR	DESCRIPTION	DATE	DWN	APVD
	D3	REVISED PER ECO-11-005294	19APR11	RK	HMR

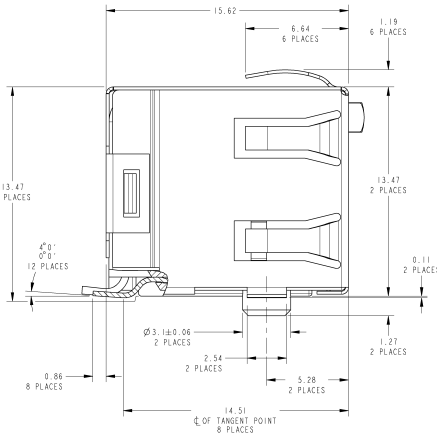

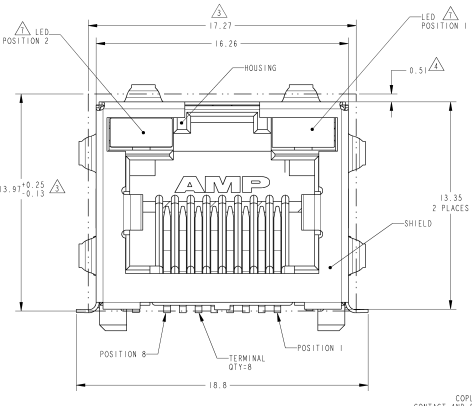

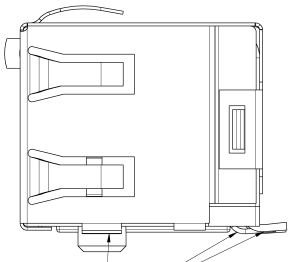

0.1
COPLANARITY AT HEELS OF LED CONTACT AND SHIELD JOINTS.(14 PLACES)

1. MATERIAL:
   HOUSING - HIGH TEMP THERMOPLASTIC, BLACK, UL94V-0
   TERMINALS - 0.30 THICK PHOS BRONZE PLATED WITH 3.81µm MINIMUM THICK MATTE TIN IN SOLDER AREA. 1.27µm MINIMUM GOLD IN LOCALIZED PLATE AREA. ENTIRE TERMINAL PLATED WITH 1.27µm MINIMUM THICK NICKEL.
   SHIELD - 0.196 THICK COPPER ZINC ALLOY PREPLATED WITH 2.03µm-3.81µm THICK MATTE TIN OVER 1.27µm THICK NICKEL.
   LIGHT EMITTING DIODE (LED) -- DIFFUSED EPOXY LENS, 0.51 X 0.51 (.020 X .020) CARBON STEEL WIREFRAME LEADS PREPLATED WITH 8.89 µm [.000080] THICK Ag OVER 1.02 µm [.000040] THICK Cu OVER 3.56 µm [.000140] THICK Ni OVER 1.02 µm [.000040] Cu UNDERPLATE.
2. JACK CAVITY CONFORMS TO FCC RULES AND REGULATIONS PART 68, SUBPART F
3. SUGGESTED PANEL OPENING DIMENSIONS: SEE APPLICATION SPEC 114-2154 FOR PANEL THICKNESS AND POSITION RECOMMENDATIONS
4. SUGGESTED CLEARANCE BETWEEN TOP OF CONNECTOR AND TOP PANEL OPENING
5. PACKAGED: POCKET TAPE & REEL (PER EAI 481 SPECIFICATIONS)

   POCKET TAPE WIDTH - 44mm
   POCKET PITCH - 24mm
   POCKET DEPTH - 16.7mm

   CLEAR COVER TAPE, PSA
   CLEAR COVER TAPE TRAILER - 610mm, WRAPPED ON REEL HUB

   PLASTIC REEL - 381mm DIAMETER

   PRODUCT QUANTITY - 200 PIECES PER REEL
6. DATUM ESTABLISHED BY CUSTOMER
7. SEE TABLE FOR COLOR OF LEDS AND NUMBER REQUIRED
8. CONNECTOR SHOULD BE POSITIONED THRU PANEL CUTOUT AS SHOWN TO SUPPORT TOP OF MODULAR JACK FOR STRAIN RELIEF
9. ZERO INSERTION FORCE POST WITH RECOMMENDED PCB LAYOUT
10. MANUFACTURING DATECODE LOCATED APPROX AS SHOWN FIRST 2 DIGITS ARE YEAR, SECOND 2 DIGITS ARE WORK WEEK, LAST DIGIT IS THE DAY OF WEEK
11. **OBSOLETE PARTS: OBSOLETE CIS STREAMLINING PER D.RENAUD/D.SINISI**

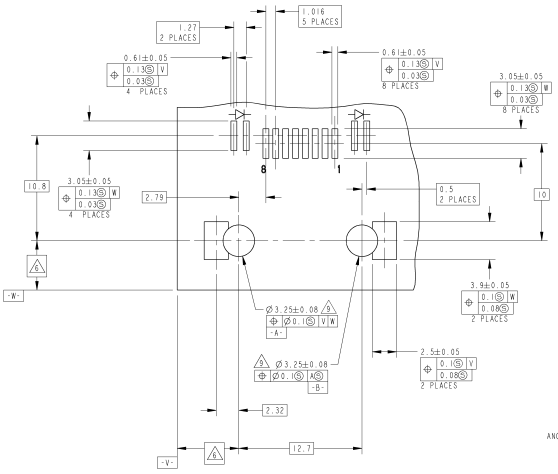

SUGGESTED PCB LAYOUT
(COMPONENT SIDE)

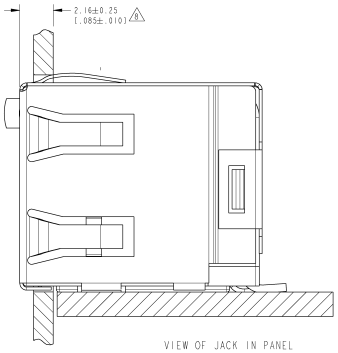

VIEW OF JACK IN PANEL

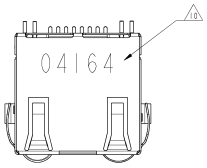

TOP VIEW
SCALE 4:1

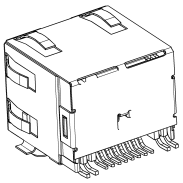

SCALE 4:1

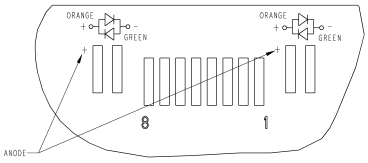

BI-COLOR LED SCHEMATIC
FOR 2-6339191-2 ONLY
SCALE 8:1

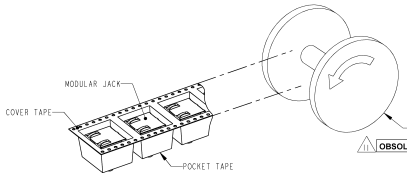

	RED	GREEN	~~2-6339191-3~~
OBSOLETE	ORANGE/GREEN	ORANGE/GREEN	2-6339191-2
	GREEN	ORANGE	2-6339191-1
	GREEN	GREEN	6339191-5
	GREEN	YELLOW	6339191-4
	YELLOW	GREEN	6339191-1
	POSITION 2	POSITION 1	PART NUMBER

DIMENSIONS: MM	TOLERANCES UNLESS OTHERWISE SPECIFIED: 3 PLC ±- / 2 PLC ±- / 1 PLC ±0.25 / 3 PLC ±- / 2 PLC ±- / ANGLES ±-	DWN 27JUL72003 Z. HOLTZCLAW/A.MAYER; CHK 27JUL72005 J. WESTMAN; APVD 27JUL72005 S.ELICKINGER	TE Connectivity
		PRODUCT SPEC 108-1163-7	INVERTED MODULAR JACK ASSEMBLY, 1x1 SHIELDED, SURFACE MOUNT, 8 POSITION, RJ45, WITH TWO LED'S
MATERIAL SEE NOTE 1	FINISH SEE NOTE 1	APPLICATION SPEC 114-6040/114-2154	
		WEIGHT -	SIZE A; CAGE CODE 00779; DRAWING NO 6339191; RESTRICTED TO -
		CUSTOMER DRAWING	SCALE 5:1; SHEET 1 OF 1; REV D3

Downloaded from Elcodis.com electronic components distributor