THIS DRAWING IS UNPUBLISHED. RELEASED FOR PUBLICATION 20
© COPYRIGHT 20 BY TYCO ELECTRONICS CORPORATION. ALL RIGHTS RESERVED.

LOC	DIST
AA	00

REVISIONS

P	LTR	DESCRIPTION	DATE	DRN	APVD
	C	ECO-07-022131	02NOV07	LAM	JW
	C1	REVISED PER ECO-09-025699	11DEC09	KK	AEG

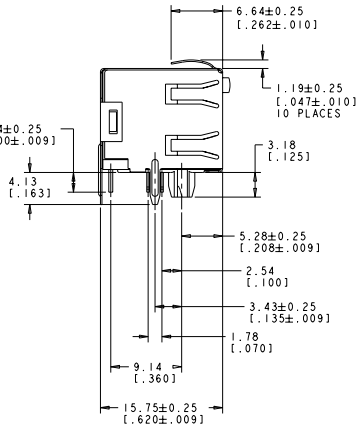

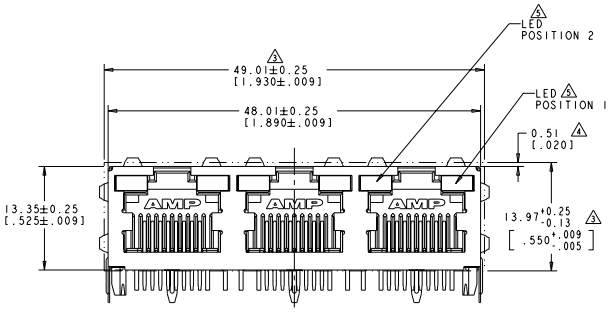

1. MATERIAL: HOUSING - THERMOPLASTIC, BLACK, UL94V-0.
   TERMINALS - .36[.014] THICK PHOSPHOR BRONZE PLATED WITH 3.81µm [.000150] MINIMUM THICK BRIGHT TIN-LEAD IN SOLDER AREA, 1.27µm [.000050] MINIMUM GOLD IN LOCALIZED PLATE AREA. ENTIRE TERMINAL PLATED WITH 1.27µm [.000050] MINIMUM THICK NICKEL.
   SHIELD - 0.196[.0077] THICK COPPER ZINC ALLOY, PREPLATED WITH 1.27µm [.000050] MINIMUM SATIN NICKEL WITH 2.03µm [.000080] MINIMUM TIN POST DIPPED ON PCB TABS.
   LIGHT EMITTING DIODE (LED) - DIFFUSED EPOXY LENS
   0.51 X 0.51 [.020 X .020] CARBON STEEL WIREFRAME LEADS PLATED WITH 8.89µm[.000350] TIN/COPPER OVER 2.03µm[.000080] SILVER OVER 1.02µm[.000040] NICKEL UNDERPLATE OVER 2.03µm [.000080] COPPER UNDERPLATE.
2. JACK CAVITY CONFORMS TO FCC RULES AND REGULATIONS PART 68, SUBPART F.

3 SUGGESTED PANEL OPENING DIMENSIONS.

4 SUGGESTED CLEARANCE BETWEEN TOP OF CONNECTOR AND TOP OF PANEL OPENING.

5 SEE TABLE FOR COLOR OF LEDS AND NUMBER REQUIRED.

6. THIS MODULAR JACK WITH INTEGRATED LED IS NOT IR REFLOW SOLDERING PROCESS COMPATIBLE.

1 OBSOLETE PARTS: OBSOLETE CIS STREAMLINING PER D.RENAUD/D.SINISI

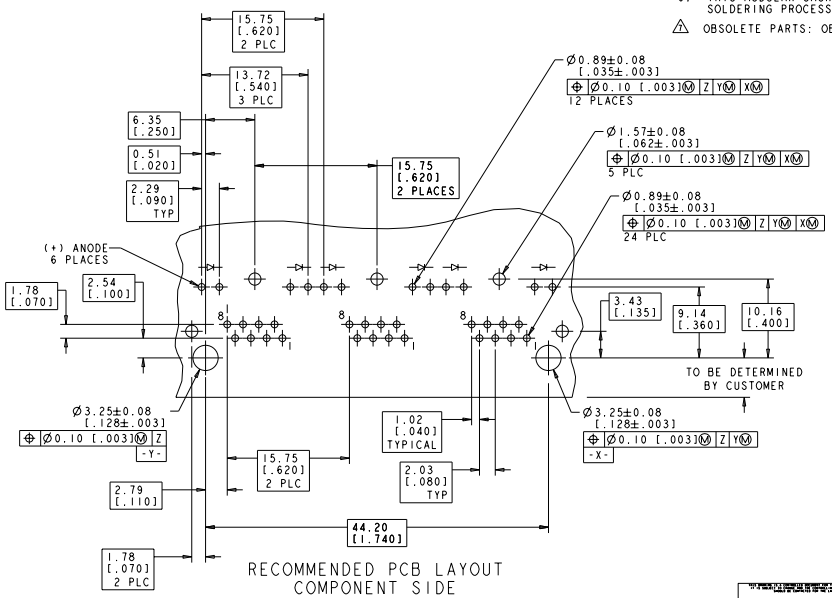

RECOMMENDED PCB LAYOUT
COMPONENT SIDE

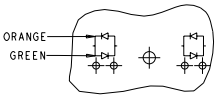

LED CURRENT DIAGRAM
1116132-7 ONLY

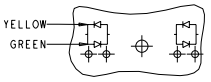

LED CURRENT DIAGRAM
1116132-8 ONLY

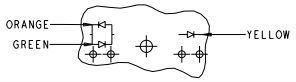

LED CURRENT DIAGRAM
1116132-9 ONLY
OBSOLETE

OBSOLETE	ORANGE/GREEN	YELLOW	1116132-9
	YELLOW/GREEN	YELLOW/GREEN	1116132-8
1 OBSOLETE	ORANGE/GREEN	ORANGE/GREEN	1116132-7
	YELLOW	YELLOW	1116132-6
	GREEN	GREEN	1116132-5
	GREEN	YELLOW	1116132-4
1 OBSOLETE	YELLOW	-	1116132-3
OBSOLETE		GREEN	1116132-2
	YELLOW	GREEN	1116132-1
	POSITION 2	POSITION 1	PART NUMBER
	INDICATOR COLOR		

THIS DRAWING IS PROPRIETARY TO TYCO ELECTRONICS CORPORATION AND SHALL NOT BE COPIED OR USED FOR ANY OTHER PURPOSE.

DIMENSIONS: MM [INCH]

TOLERANCES UNLESS OTHERWISE SPECIFIED:
0 PLC ±:
1 PLC ±:
2 PLC ±0.13[.005]
3 PLC ±:
4 PLC ±:
ANGLES ±1°

MATERIAL SEE NOTE 1
FINISH SEE NOTE 1

DWN D.J. AHERON 29JUL98
CHK J. WESTMAN 13OCT07
APVD E. LAUBER 29JUL98

Tyco Electronics Corporation
Harrisburg, PA 17105-3608

NAME INVERTED MODULAR JACK ASSEMBLY, 1 X 3, SHIELDED, PANEL GROUND TABS, LED

PRODUCT SPEC 108-1163-4
APPLICATION SPEC 114-2154
WEIGHT -

SIZE A1 | CAGE CODE 00779 | DRAWING NO C-1116132 | RESTRICTED TO -

CUSTOMER DRAWING | SCALE 4:1 | SHEET 1 OF 1 | REV C1

AMP 4805 REV 31MAR2000
Pro/ENGINEER DRAWING

Downloaded from Elcodis.com electronic components distributor