THIS DRAWING IS UNPUBLISHED. RELEASED FOR PUBLICATION -.-.-
© COPYRIGHT -- By -- ALL RIGHTS RESERVED.

LTR	DIST
AA	00

REVISIONS

P	LTR	DESCRIPTION	DATE	DWN	APVD
	K4	REVISED PER ECO-11-005033	26MAR11	RK	HMR

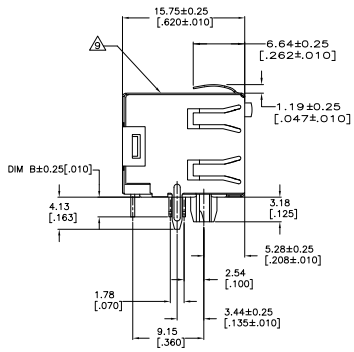

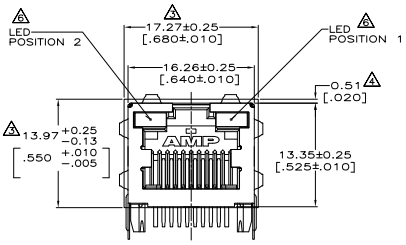

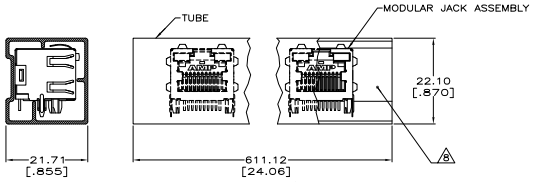

DETAIL A
TUBE PACKAGING
SCALE 2:1

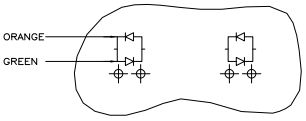

LED CURRENT DIAGRAM
406507-7, 1-406507-7,
AND 3-406507-7

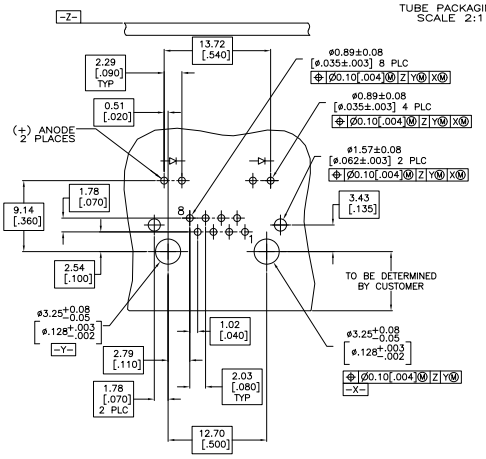

RECOMMENDED PRINTED CIRCUIT BOARD
(COMPONENT SIDE)

1. MATERIAL:
HOUSING – HIGH TEMPERATURE THERMOPLASTIC, BLACK, UL94V-0.
TERMINALS – 0.36[.014] THICK PHOS BRONZE PLATED WITH 3.81μm[.000150] MINIMUM THICK (SEE P/N TABLE) IN SOLDER AREA. 1.27μm [.000050] MINIMUM GOLD IN LOCALIZED PLATE AREA. ENTIRE TERMINAL PLATED WITH 1.27μm [.000050] MINIMUM THICK NICKEL.
SHIELD – 0.196[.0077] THICK COPPER ZINC ALLOY PREPLATED WITH 1.27μm[.000050] MINIMUM SATIN NICKEL WITH 2.03μm[.000080] MINIMUM TIN POST DIPPED ON PCB GROUND TABS.
LIGHT EMITTING DIODE (LED) – DIFFUSED EPOXY LENS, 0.51 x 0.51[.020 x .020] CARBON STEEL WIREFRAME LEADS PLATED WITH 8.89μm[.000350] TIN/COPPER OVER 2.03μm[.000080] SILVER OVER 1.02μm[.000040] NICKEL UNDERPLATE OVER 2.03μm[.000080] COPPER UNDERPLATE.

2. JACK CAVITY CONFORMS TO FCC RULES AND REGULATIIONS PART 68, SUBPART F.

3. SUGGESTED PANEL OPENING DIMENSIONS.

4. SUGGESTED CLEARANCE BETWEEN TOP OF CONNECTOR AND TOP PANEL OPENING.

5. 0.051[.002] WHITE POLYESTER INSULATOR APPLIED TO BACK OF HOUSING.

6. SEE TABLE FOR COLOR OF LEDS AND NUMBER REQUIRED.

7. THIS MODULAR JACK WITH INTEGRATED LED IS NOT IR REFLOW SOLDERING PROCESS COMPATIBLE.

8. PACKAGED 30 PIECES PER TUBE. SEE DETAIL "A".

9. MANUFACTURING DATE CODE:
LOCATED APPROX. AS SHOWN.
FIRST 2 DIGITS = LAST 2 DIGITS OF YEAR.
NEXT 2 DIGITS = MANUFACTURING WORK WEEK.
LAST DIGIT = DAY OF WEEK WITH SUNDAY = 1.

10. OBSOLETE PARTS: OBSOLETE CIS STREAMLINING PER D.RENAUD/D.SINISI

	TERMINAL LEAD PLATING	DIM B SOLDERTAIL LENGTH		PACKAGING	POSITION 2 INDICATOR COLOR	POSITION 1 INDICATOR COLOR	PART NUMBER
	TIN-LEAD	2.54	[.100]	8 TUBE	GREEN	YELLOW	7-406507-4
	MATTE TIN	3.05	[.120]	TRAY	ORANGE/GREEN	ORANGE/GREEN	3-406507-7
10 OBSOLETE	~~MATTE TIN~~	~~3.05~~	~~[.120]~~	~~TRAY~~	~~GREEN~~	~~GREEN~~	~~3-406507-5~~
10 OBSOLETE	~~MATTE TIN~~	~~3.05~~	~~[.120]~~	~~TRAY~~	~~GREEN~~	~~YELLOW~~	~~3-406507-4~~
10 OBSOLETE	~~MATTE TIN~~	~~3.05~~	~~[.120]~~	~~TRAY~~	~~YELLOW~~	~~GREEN~~	~~3-406507-1~~
	MATTE TIN	2.54	[.100]	8 TUBE	GREEN	YELLOW	2-406507-4
	MATTE TIN	2.54	[.100]	TRAY	ORANGE/GREEN	ORANGE/GREEN	1-406507-7
10 OBSOLETE	~~MATTE TIN~~	~~2.54~~	~~[.100]~~	~~TRAY~~	~~YELLOW~~	~~YELLOW~~	~~1-406507-6~~
	MATTE TIN	2.54	[.100]	TRAY	GREEN	GREEN	1-406507-5
	MATTE TIN	2.54	[.100]	TRAY	GREEN	YELLOW	1-406507-4
10 OBSOLETE	~~MATTE TIN~~	~~2.54~~	~~[.100]~~	~~TRAY~~	~~YELLOW~~	–	~~1-406507-3~~
10 OBSOLETE	~~MATTE TIN~~	~~2.54~~	~~[.100]~~	~~TRAY~~	–	~~GREEN~~	~~1-406507-2~~
	MATTE TIN	2.54	[.100]	TRAY	YELLOW	GREEN	1-406507-1
	TIN-LEAD	2.54	[.100]	TRAY	ORANGE/GREEN	ORANGE/GREEN	406507-7
10 OBSOLETE	~~TIN-LEAD~~	~~2.54~~	~~[.100]~~	~~TRAY~~	~~YELLOW~~	~~YELLOW~~	~~406507-6~~
OBSOLETE	TIN-LEAD	2.54	[.100]	TRAY	GREEN	GREEN	406507-5
	TIN-LEAD	2.54	[.100]	TRAY	GREEN	YELLOW	406507-4
10 OBSOLETE	~~TIN-LEAD~~	~~2.54~~	~~[.100]~~	~~TRAY~~	~~YELLOW~~	–	~~406507-3~~
10 OBSOLETE	~~TIN-LEAD~~	~~2.54~~	~~[.100]~~	~~TRAY~~	–	~~GREEN~~	~~406507-2~~
	TIN-LEAD	2.54	[.100]	TRAY	YELLOW	GREEN	406507-1

THIS DRAWING IS A CONTROLLED DOCUMENT.

DIMENSIONS: mm [INCHES]

TOLERANCE UNLESS OTHERWISE SPECIFIED:
0 PLC ± –
1 PLC ± –
2 PLC ± 0.25[.01]
3 PLC ± 0.13[.005]
4 PLC ± –
ANGLES ± –

MATERIAL 1
FINISH 1

DRN	T. SPRINKLE	15SEP97
CHK	T. SPRINKLE	15SEP97
APVD	M. DERSTINE	08OCT97
PRODUCT SPEC	108-1163-4	
APPLICATION SPEC	114-2154	
WEIGHT	–	

TE Connectivity

NAME: INVERTED MODULAR JACK ASSEMBLY, 1X1, SHIELDED, PANEL GROUND, LED, INSULATOR

SIZE	CAGE CODE	DRAWING NO	RESTRICTED TO
A1	00779	C-406507	–

CUSTOMER DRAWING | SCALE 4:1 | SHEET 1 OF 1 | REV K4

4MOS (3/11)

Downloaded from Elcodis.com electronic components distributor