THIS DRAWING IS UNPUBLISHED. RELEASED FOR PUBLICATION 20
© COPYRIGHT 20 BY - ALL RIGHTS RESERVED.

LOC	DIST
AA	00

REVISIONS

P	LTR	DESCRIPTION	DATE	DRN	APVD
	B6	REVISED PER ECO-11-005033	10MAR2011	RK	HMR

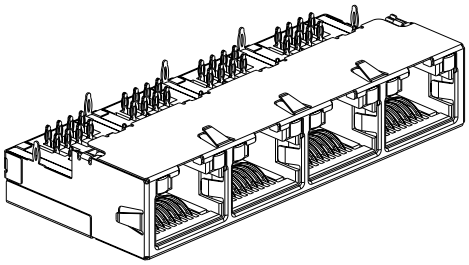

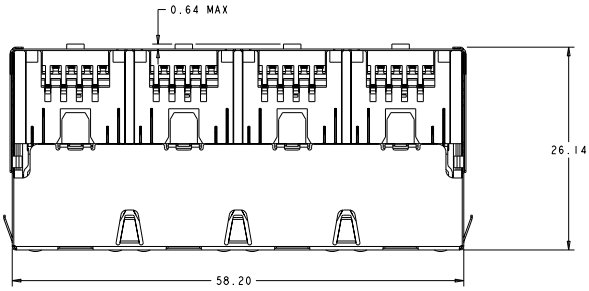

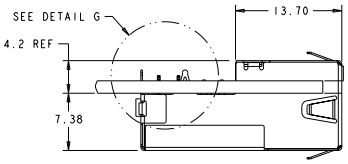

VIEW SHOWN ASSEMBLED
TO PCB ONLY

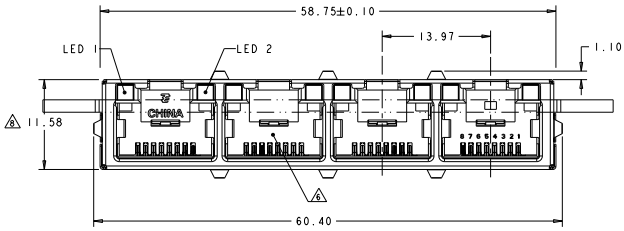

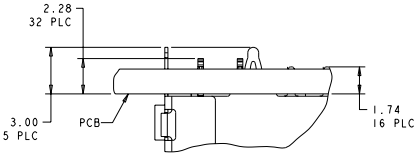

DETAIL G
SCALE 8:1

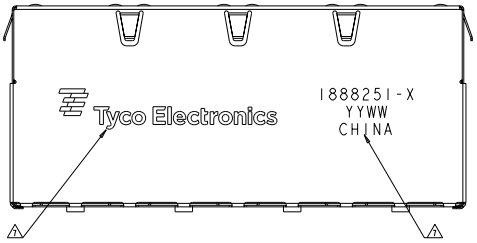

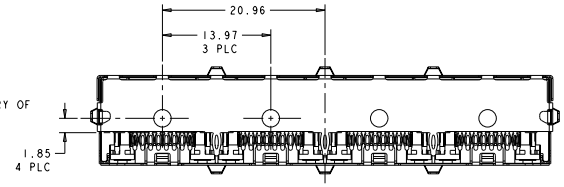

1. MATERIALS:
   HOUSING: BLACK PBT, 94V-0.
   OVERMOLDED INSERT: BLACK LCP, 94V-0.
   SHIELD: COPPER ALLOY WITH 0.76µm MIN NICKEL PLATE
   CONTACTS: PHOSPHOR BRONZE WITH 1.27µm MIN GOLD
   AT MATING INTERFACE OVER 1.27µm MIN NICKEL
   UNDERPLATE.
2. PERFORMANCE:
   INSERTION LOSS: 0.4dB @ 100 MHz.
   RETURN LOSS: 12.0dB @ 100 MHz.
   CROSSTALK ATTENUATION: -43dB MINIMUM @ 100MHz
3. LED's COMPLIANT WITH IEC60825-1 SAFETY OF LASER PRODUCTS WHEN OPERATED AT CURRENT OF 20mA.
4. ALL DIMENSIONS NOMINAL.
5. RECOMMENDED MOTHERBOARD PCB THICKNESS: 1.60±0.16.

6 RJ45 PORT CONFORMS TO FCC RULES AND REGULATIONS PART 68 SUB-PART F.

7 TE LOGO, TE CONNECTIVITY PART NUMBER, DATE CODE AND COUNTRY OF ORIGIN TO BE MARKED IN APPROXIMATE LOCATION SHOWN.

8 THIS DIMENSION MEETS THE ADVANCED MEZZANINE CARD (AMC) SPECIFICATION.

GREEN	GREEN	1888251-4
-	-	1888251-3
GRN/YEL	GRN/YEL	1888251-2
GREEN	YELLOW	1888251-1
LED #1	LED #2	PART NUMBER

THIS DRAWING IS A CONTROLLED DOCUMENT.

DIMENSIONS: MM

TOLERANCES UNLESS OTHERWISE SPECIFIED:
0 PLC ±-
1 PLC ±-
2 PLC ±0.13
3 PLC ±-
4 PLC ±-
ANGLES ±0°

MATERIAL SEE NOTE 1
FINISH SEE NOTE 1

DRN 15FEB2008 M.E.S./L.A.
CHK 15FEB2008 WESTMAN
APVD 15FEB2008 S.FLICKINGER
PRODUCT SPEC -
APPLICATION SPEC 114-13179
WEIGHT -

TE Connectivity

NAME CONNECTOR ASSEMBLY, LOW PROFILE, PRESS FIT, MODULAR JACK, 1X4, RJ45

SIZE A1 | CAGE CODE 00779 | DRAWING NO C-1888251 | RESTRICTED TO -

CUSTOMER DRAWING | SCALE 1:1 | SHEET 1 OF 3 | REV B6

4005 13/111
Pro/ENGINEER DRAWING

Downloaded from Elcodis.com electronic components distributor

THIS DRAWING IS UNPUBLISHED. RELEASED FOR PUBLICATION 20
© COPYRIGHT 20 BY - ALL RIGHTS RESERVED.

LOC	DIST
AA	00

REVISIONS

#	LTR	DESCRIPTION	DATE	DWN	APVD
	-	SEE SHEET 1	-	-	-

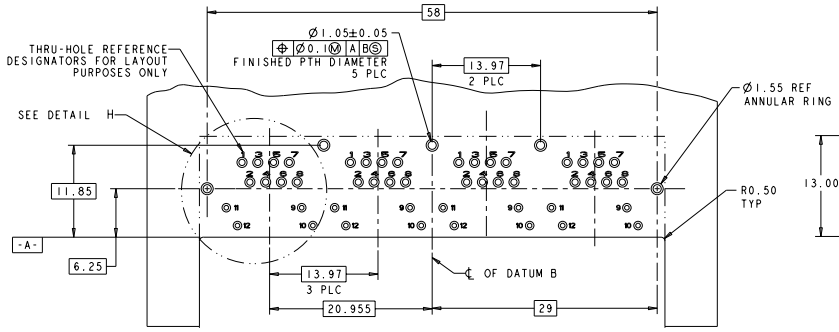

PCB SIDE 2

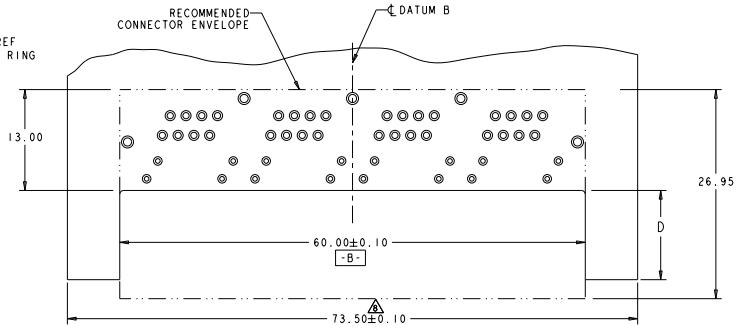

PCB SIDE 1

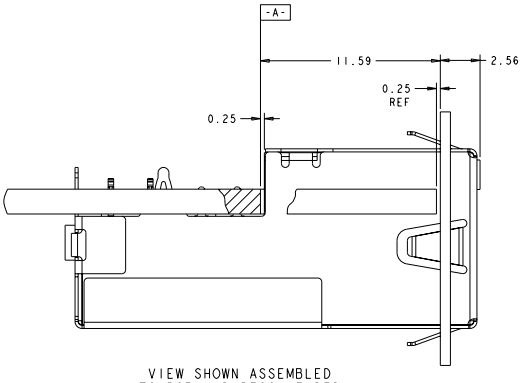

VIEW SHOWN ASSEMBLED TO PCB AND RECOMMENDED STANDARD FACE PLATE
SCALE 8:1

STANDARD FACE PLATE	11.34
AMC MODULE FACE PLATE	11.50
PCB CUTOUT	D

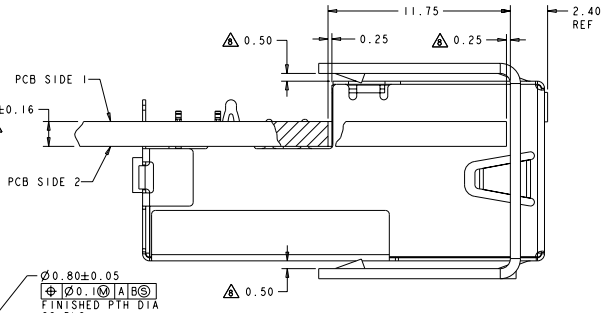

VIEW SHOWN ASSEMBLED TO PCB AND RECOMMENDED AMC MODULE FACE PLATE
SCALE 8:1

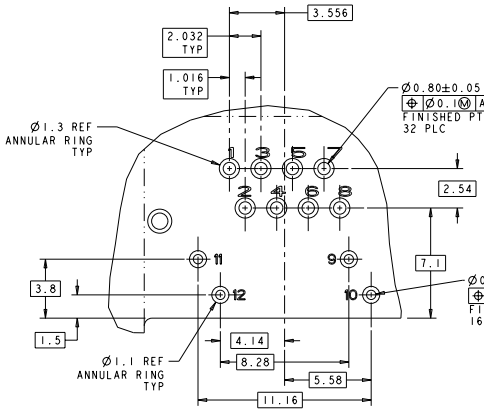

DETAIL H
SCALE 8:1

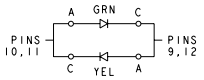

1888251-2 ONLY

	PIN #	1888251-1	1888251-2	1888251-3	1888251-4
LED 1	9	CATHODE(-)	ANODE(YEL),CATHODE(GRN)	-	CATHODE(-)
	10	ANODE(+)	ANODE(GRN),CATHODE(YEL)	-	ANODE(+)
LED 2	11	ANODE(+)	ANODE(GRN),CATHODE(YEL)	-	ANODE(+)
	12	CATHODE(-)	ANODE(YEL),CATHODE(GRN)	-	CATHODE(-)

THIS DRAWING IS A CONTROLLED DOCUMENT.

DIMENSIONS: MM

TOLERANCES UNLESS OTHERWISE SPECIFIED:
0 PLC ±-
1 PLC ±-
2 PLC ±0.13
3 PLC ±-
4 PLC ±-
ANGLES ±0°

MATERIAL: SEE NOTE 1
FINISH: SEE NOTE 1

DWN: 15FEB2008 M.E.S./L.A.KEYES
CHK: 15FEB2008 J. WESTMAN
APVD: 15FEB2008 S.FLICKINGER
PRODUCT SPEC: ~~108-2274~~ 114-13179
APPLICATION SPEC: -
WEIGHT: -

TE Connectivity

NAME: CONNECTOR ASSEMBLY, LOW PROFILE, PRESS FIT, MODULAR JACK, 1X4, RJ45

SIZE: A1 | CAGE CODE: 00779 | DRAWING NO: C-1888251 | RESTRICTED TO: -

CUSTOMER DRAWING | SCALE: 4:1 | SHEET 2 OF 3 | REV: B6

Downloaded from Elcodis.com electronic components distributor

THIS DRAWING IS UNPUBLISHED. RELEASED FOR PUBLICATION 20
© COPYRIGHT 20 BY - ALL RIGHTS RESERVED.

LOC	DIST
AA	00

REVISIONS

P	LTR	DESCRIPTION	DATE	DWN	APVD
	-	SEE SHEET 1	-	-	-

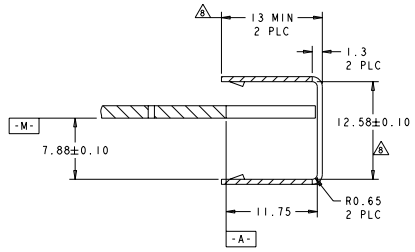

SECTION Z-Z

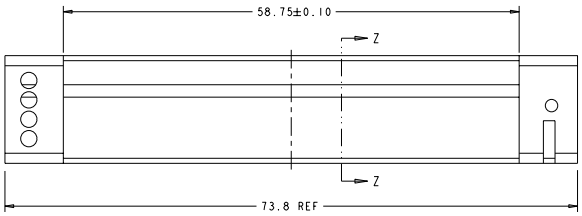

AMC SINGLE WIDTH, HALF HEIGHT MODULE FACE PLATE

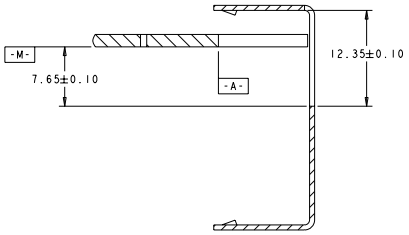

SECTION Y-Y

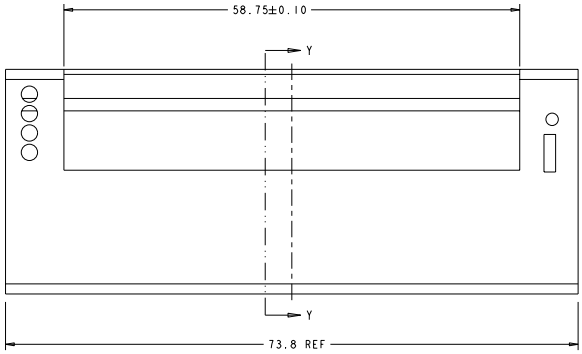

AMC SINGLE WIDTH, FULL HEIGHT MODULE FACE PLATE

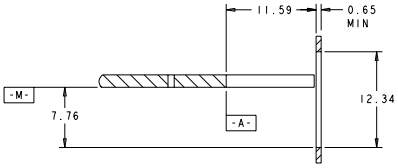

SECTION X-X

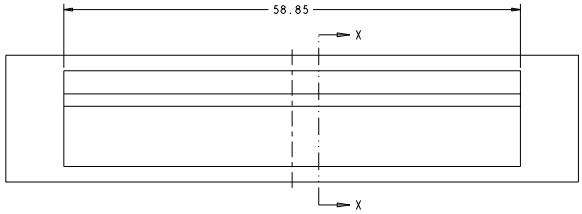

STANDARD FACE PLATE

THIS DRAWING IS A CONTROLLED DOCUMENT.

DIMENSIONS: mm

TOLERANCES UNLESS OTHERWISE SPECIFIED:
0 PLC ±-
1 PLC ±-
2 PLC ±0.13
3 PLC ±-
4 PLC ±-
ANGLES ±0°

MATERIAL SEE NOTE 1

FINISH SEE NOTE 1

DWN 13FEB2008 M.E.S./L.A.MEYER
CHK 15FEB2008 J.WESTMAN
APPD 15FEB2008 S.FLICKINGER

PRODUCT SPEC ~~108-2274~~
APPLICATION SPEC 114-13179
WEIGHT -

TE Connectivity

NAME CONNECTOR ASSEMBLY, LOW PROFILE, PRESS FIT, MODULAR JACK, 1X4, RJ45

SIZE A1 | CAGE CODE 00779 | DRAWING NO C-1888251 | RESTRICTED TO -

CUSTOMER DRAWING | SCALE 4:1 | SHEET 3 OF 3 | REV B.6

Downloaded from Elcodis.com electronic components distributor