THIS DRAWING IS UNPUBLISHED. RELEASED FOR PUBLICATION .19 -
© COPYRIGHT 19 BY AMP INCORPORATED. ALL RIGHTS RESERVED.

LOC	STEP	REVISIONS				
GP	.00	LTR	DESCRIPTION	DATE	DWN	APVD
		M	REVISED PER EC 0513-0543-04	12MAY05	JG	SS

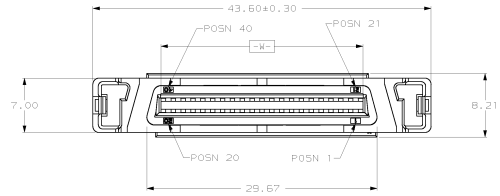

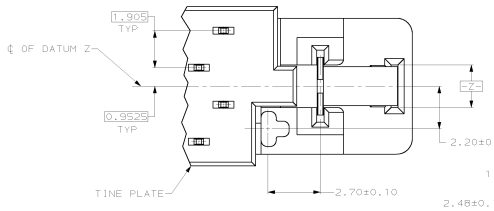

DETAIL B
SCALE 10:1

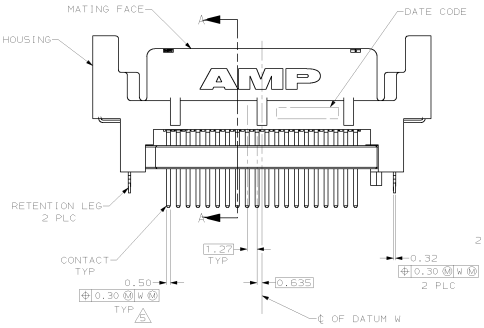

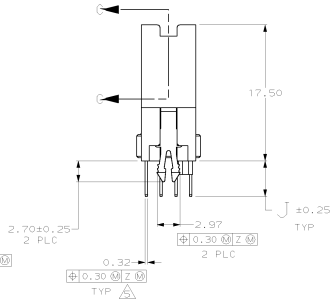

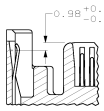

SECTION C-C

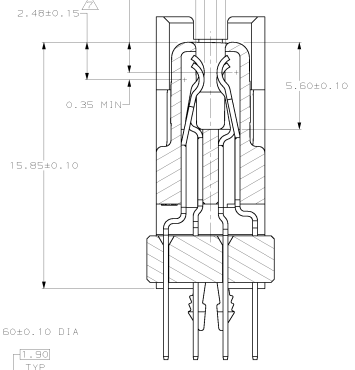

SECTION A-A
SCALE 8:1

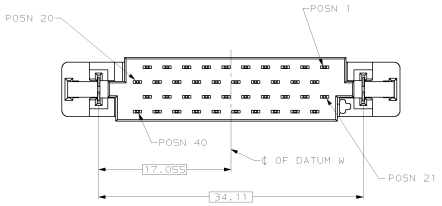

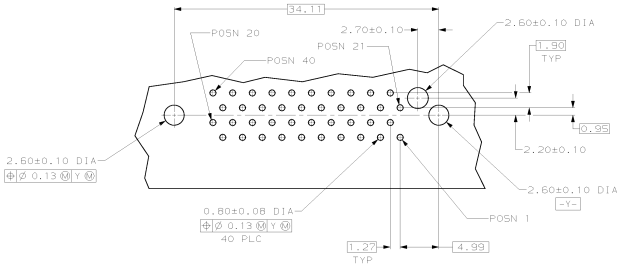

5 RECOMMENDED PC BOARD MOUNTING DIMENSIONS COMPONENT SIDE

1. HOUSING & TINE PLATE: POLYESTER, UL 94V-0 RATED, BLACK.
   CONTACTS: PHOSPHOR BRONZE.
   RETENTION LEGS: BRASS.
2. CONTACTS: 0.76 µm MIN GOLD FOR A LENGTH 1.20 MIN STARTING 0.50 MAX FROM MATING END, 3.81 µm MIN TIN-LEAD ON SOLDER TINES, BOTH OVER 1.27 µm MIN NICKEL.
   RETENTION LEGS: 3.81 µm MIN TIN-LEAD OVER 1.27 µm MIN NICKEL.
3. CONNECTOR WILL ACCOMMODATE PRINTED CIRCUIT BOARD THICKNESS OF 1.77 TO 4.06.
4. CONNECTOR WILL ACCOMMODATE MATING PRINTED CIRCUIT BOARD OF 1.60±0.07 THICKNESS.
5. POSITION TOLERANCE APPLIES AT CONTACT TIP ONLY.
6. CONTACTS 21, 22, 23, 26, 29, 32, AND 35 THRU 40 ARE POSITIONED TOWARD THE MATING FACE. (FIRST MATE)
7. CONTACTS 1 THRU 20, 24, 25, 27, 28, 30, 31, 33, AND 34 ARE POSITIONED AWAY FROM THE MATING FACE. (SECOND MATE)
8. CONTACTS: 0.76 µm MIN GOLD FOR A LENGTH 1.20 MIN STARTING 0.50 MAX FROM MATING END, 3.81 µm MIN MATTE TIN ON SOLDER TINES, BOTH OVER 1.27 µm MIN NICKEL.
   RETENTION LEGS: 3.81 µm MIN HALT TIN.

OBSOLETE	8	4.57	787597-3
	7	2.79	787597-2
	2	4.57	787597-1
FINISH		J	PART NUMBER

THIS DRAWING IS CONTRACTUALLY BOUND TO AMP INCORPORATED. IT IS STRICTLY PROHIBITED TO REPRODUCE OR DISTRIBUTE THIS DRAWING OR DISCLOSE THE INFORMATION CONTAINED HEREIN WITHOUT THE WRITTEN PERMISSION OF AMP INCORPORATED.

DIMENSIONS: MM
TOLERANCES UNLESS OTHERWISE SPECIFIED:
0 PLC ±-
1 PLC ±-
2 PLC ±0.13
3 PLC ±-
4 PLC ±-
ANGLES ±-
MATERIAL 1
FINISH SEE TABLE.

DWN	27 SEP 92	AMP Incorporated Harrisburg, PA 17105-3608
CHK	28 SEP 94	
APVD	29 SEP 94	
PRODUCT SPEC	108-1548	NAME: RECEPTACLE ASSEMBLY, EXTENDED HEIGHT, VERTICAL, 40 POSN, SERIES 1, CHAMP BLINDMATE
APPLICATION SPEC	114-60061	
WEIGHT	–	SIZE A1 · CODE CODE 00779 · DRAWING NO C-787597
CUSTOMER DRAWING		SCALE 4:1 · SHEET 1 OF 1 · REV M

AMP 4005 REV 09941954

21-MAY-98 14:29:27 amp35287 /home/scr4/0364/0A04/bqp14023/amp35287/edmsd

Downloaded from Elcodis.com electronic components distributor