THIS DRAWING IS UNPUBLISHED. RELEASED FOR PUBLICATION -.-. -
© COPYRIGHT - BY TYCO ELECTRONICS CORPORATION. ALL RIGHTS RESERVED.

LOC	DIST
DF	DO

REVISIONS

P	LTR	DESCRIPTION	DATE	DRN	APVD
	F	REV PER ECO-07-005655	04APR07	PY	ND

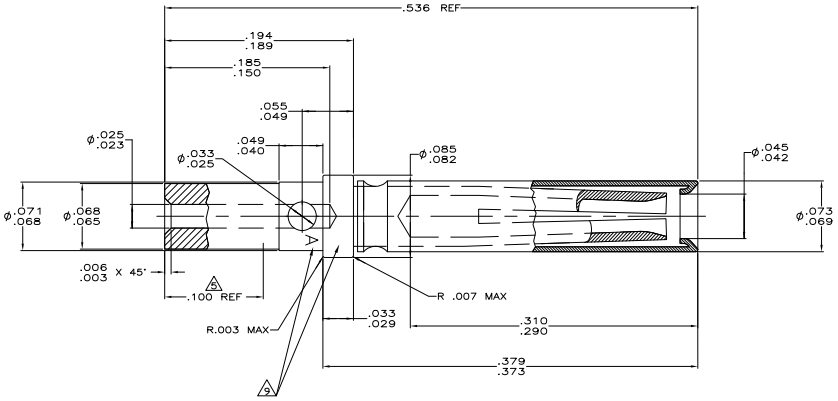

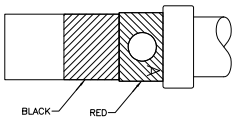

COLOR BANDS
PART NO 206795-3 ONLY

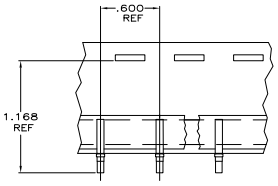

TAPE MOUNTED
PART NO 206795-2 ONLY
SCALE 2:1

1. ALL DIMENSIONS APPLY AFTER PLATING.
2. THIS CONTACT COMPLIES WITH MIL-C-24308/10, EXCEPT WIRE BARREL.
3. ALL DIAMETERS CONCENTRIC WITH EACH OTHER WUTHIN .004 T.I.R.
4. ALL SURFACES HAVE 63 FINISH OR BETTER UNLESS OTHERWISE SPRCIFIED.
5. POINT OF PLATING MEASUREMENT .100 FROM WIRE BALLEL END OF CONTACT.
6. SLEEVE MAY BE CRIMPED OR DIMPLED ON TO CONTACT BODY.
7. OPTIONAL LOCATION FOR STAMPED LETTER "A"

SUPERSEDED BY -2	SAME AS -3 EXCEPT TAPE MOUNTED	206795-4
	SAME AS -1 EXCEPT COLOR COATED	206795-3
	SAME AS -1 EXCEPT TAPE MOUNTED	206795-2
	AS SHOWN	206795-1
	DESCRIPTION	PART NUMBER

THIS DRAWING IS A CONTROLLED DOCUMENT.

DIMENSIONS: INCHES

TOLERANCE UNLESS OTHERWISE SPECIFIED
0 PLC ± -
1 PLC ± -
2 PLC ± -
3 PLC ± -
4 PLC ± -
ANGLES ± °

MATERIAL: SEE CALOUT
FINISH: SEE CALOUT

DR C.C.THOMAS 1-17-03
CK D.MILLER 1-17-03
APVD D.MILLER 1-17-03
PRODUCT SPEC —
APPLICATION SPEC —
WEIGHT —

Tyco Electronics Corporation
Harrisburg, PA 17105-3608

NAME SOCKET CONTACT ASSY,SIZE 20 (FOR #26 & #28 WIRE)

SIZE A1 CAGE CODE 00779 DRAWING NO C-206795 RESTRICTED TO —

CUSTOMER DRAWING SCALE 20:1 SHEET 1 OF 1 REV F

AMP 4805 REV 31MM2000

Downloaded from Elcodis.com electronic components distributor