THIS DRAWING IS UNPUBLISHED. RELEASED FOR PUBLICATION: .19 . .
© COPYRIGHT 19 BY AMP INCORPORATED. ALL RIGHTS RESERVED.

LOC	GROP
DF	D0

REVISIONS

Y	LTR	DESCRIPTION	DATE	DWN	APVD
	A	ADD -2,-3 & -4 PER 063D-0076-00	6-00	CT	RG

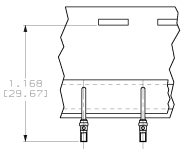

1218266-2 & -4 ONLY
SCALE: NTS

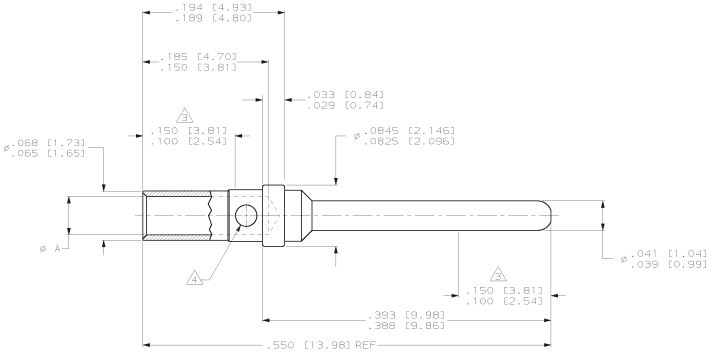

1. MATERIAL: COPPER ALLOY
2. FINISH: GOLD PLATE .000030 [0.76µm] MIN THICK OVER NICKEL PLATE .000050 [1.27µm] MIN THICK.
3. POINT OF PLATING THICKNESS MEASUREMENT – SHALL BE MEASURED ON BOTH WIRE BARREL AND PIN END.
4. INSPECTION HOLE THRU ONE WALL ONLY RADIAL LOCATION OPTIONAL.

REMARKS	DIM A	FINISH	MATERIAL	PART NUMBER
TAPE MOUNTED 20-24 AWG WIRE	.043-.046 [1.09-1.17]	2	1	1218266-4
LOOSE PIECE 20-24 AWG WIRE	.043-.046 [1.09-1.17]	2	1	1218266-3
TAPE MOUNTED 18 AWG WIRE	.051-.053 [1.30-1.35]	2	1	1218266-2
LOOSE PIECE 18 AWG WIRE	.051-.053 [1.30-1.35]	2	1	1218266-1

THIS DRAWING IS A CONTROLLED DOCUMENT.

DIMENSIONS: INCHES [mm]

TOLERANCES UNLESS OTHERWISE SPECIFIED:
± PLC ±-
± PLC ±-
± PLC ±-
± PLC ±.005 [0.13]
± PLC ±-
ANGLES ±1°

MATERIAL 1
FINISH 2

DWN D. BRANDBERG 08 APR 98
CHK J.G.GRIFFITH 04 DEC 99
APVD J.G.GRIFFITH 04 DEC 99
PRODT SPEC –
APPLICATION SPEC –
WEIGHT –

CUSTOMER DRAWING

AMP Incorporated
Harrisburg, PA 17105-3608

NAME
CONTACT, PIN, CRIMP TYPE, SIZE 20, 18 AWG

SIZE A1 | CAGE CODE 00779 | DRAWING NO C-1218266 | RESTRICTED TO –

SCALE 15:1 | SHEET 1 OF 1 | REV A

AMP 4805 REV 11.XMB7

Downloaded from Elcodis.com electronic components distributor