THIS DRAWING IS UNPUBLISHED. RELEASED FOR PUBLICATION -,- .
© COPYRIGHT 2006 BY TYCO ELECTRONICS CORPORATION. ALL RIGHTS RESERVED.

LOC	DIST
GP	00

REVISIONS

P	LTR	DESCRIPTION	DATE	DWN	APVD
	B3	REVISED PER ECO-08-004984	10MAR08	JDP	CWR

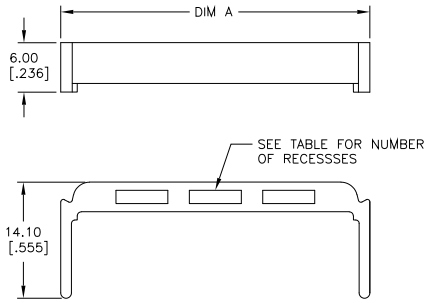

1 GLASS-REINFORCED POLYESTER, COLOR: SEE TABLE.

	COLOR	NUMBER OF RECESSES	A	NUMBER OF POSITIONS	T&B PART NUMBER (REFERENCE)	TE PART NUMBER
	BLUE	7	85.78[3.377]	64	622-6431	4-1437025-0
OBSOLETE	BLUE	7	80.70[3.177]	60	622-6031	3-1437025-0
	BLUE	6	68.00[2.677]	50	622-5031	1-1437025-2
OBSOLETE	BLUE	5	60.38[2.377]	44	622-4431	9-1437024-4
	BLUE	4	55.30[2.177]	40	622-4031	8-1437024-3
OBSOLETE	BLUE	4	50.22[1.977]	36	622-3631	6-1437024-9
	BLUE	4	47.68[1.877]	34	622-3431	5-1437024-3
	BLUE	4	42.60[1.677]	30	622-3031	4-1437024-0
	BLUE	3	37.52[1.477]	26	622-2631	2-1437024-8
	BLUE	2	34.98[1.377]	24	622-2431	1-1437024-6
	BLUE	2	29.90[1.177]	20	622-2031	1437024-5
	BLUE	1	24.82[.977]	16	622-1631	8-1437023-9
	BLUE	1	22.28[.877]	14	622-1431	7-1437023-1
	BLUE	0	19.74[.777]	12	622-1231	1-1437022-8
	BLUE	0	17.20[.677]	10	622-1031	4-1437023-7
	BLUE	0	12.12[.477]	6	622-0631	2-1437023-9
OBSOLETE	BLUE	0	9.58[.377]	4	622-0431	2-1437023-0
	BLACK	7	85.78[3.377]	64	636-6431	1437029-2
	BLACK	7	80.70[3.177]	60	636-6031	9-1437028-5
	BLACK	6	68.00[2.677]	50	636-5031	6-1437028-8
OBSOLETE	BLACK	5	60.38[2.377]	44	636-4431	4-1437028-9
	BLACK	4	55.30[2.177]	40	636-4031	3-1437028-4
	BLACK	4	47.68[1.877]	34	636-3431	8-1437027-0
	BLACK	4	42.60[1.677]	30	636-3031	6-1437011-6
	BLACK	3	37.52[1.477]	26	636-2631	3-1437027-4
	BLACK	2	34.98[1.377]	24	636-2431	5-1437011-3
	BLACK	2	29.90[1.177]	20	636-2031	1437027-7
	BLACK	1	24.82[.977]	16	636-1631	8-1437026-5
	BLACK	1	22.28[.877]	14	636-1431	6-1437026-6
OBSOLETE	BLACK	0	19.74[.777]	12	636-1231	3-1447109-4
	BLACK	0	17.20[.677]	10	636-1031	3-1437026-9
	BLACK	0	12.12[.477]	6	636-0631	1-1437026-9

1-1437026-9

THIS DRAWING IS A CONTROLLED DOCUMENT.

DIMENSIONS: INCHES

TOLERANCES UNLESS OTHERWISE SPECIFIED:
0 PLC ± -
1 PLC ± -
2 PLC ± -
3 PLC ± 0.13[.005]
4 PLC ± -
ANGLES ± -

MATERIAL 1
FINISH -

DWN J.GERACE 22MAR06
CHK C.ROHDE 22MAR06
APVD M.WALMSLEY 22MAR06
PRODUCT SPEC —
APPLICATION SPEC —
WEIGHT —

Tyco Electronics
Tyco Electronics Corporation
Harrisburg, PA 17105-3608

NAME STRAIN RELIEF, FEMALE SOCKET CONNECTOR

SIZE	CAGE CODE	DRAWING NO	RESTRICTED TO
A2	00779	C-1-1437026-9	—

CUSTOMER DRAWING | SCALE 3:1 | SHEET 1 OF 1 | REV B3

AMP 1471-9 REV 31MAR2000

Downloaded from Elcodis.com electronic components distributor