THIS DRAWING IS CONFIDENTIAL — RELEASED FOR PUBLICATION
© COPYRIGHT 2009 — ALL RIGHTS RESERVED

REVISIONS				
CM 00				
	E	REVISED PER ECO-11-015328	160011	KH	SM

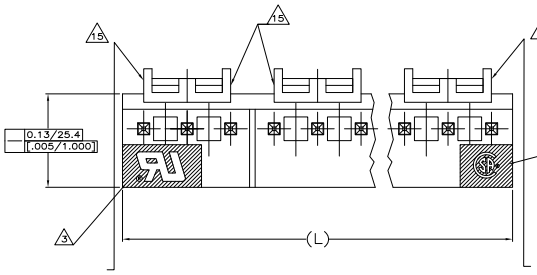

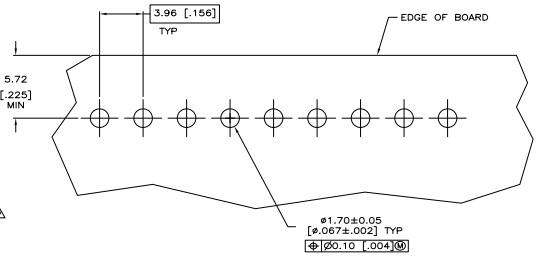

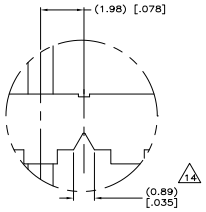

DETAIL C

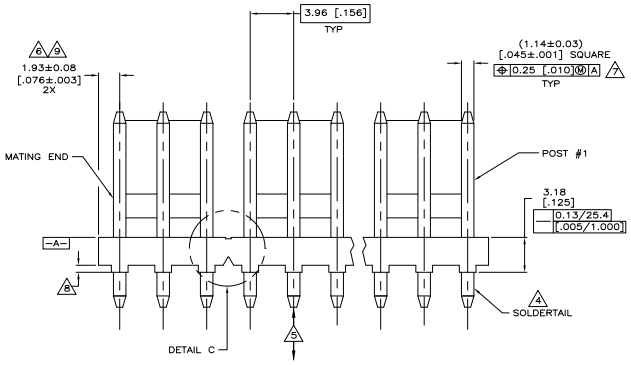

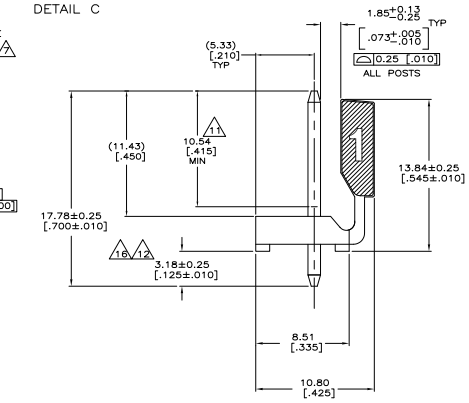

1. MATERIAL
   HOUSING: THERMOPLASTIC POLYESTER, GLASS FILLED, UL94V-0
   POST: COPPER ALLOY
2. FINISH
   HOUSING: NATURAL
   POST: SEE NOTES 11, 12, & 16 FOR PLATING.
3. UL MARKING MAY NOT APPEAR ON THE 2 OR 3 POSITION SIZES. CSA MARKING MAY NOT APPEAR ON THE 2 POSITION SIZE.
4. POST SOLDERTAILS COMPLY WITH TYCO SOLDERABILITY SPECIFICATION 109-11-2.
5. POST WITHSTANDS 13.34 NEWTONS (3 LBS) MINIMUM AXIAL FORCE IN EITHER DIRECTION WITHOUT DISLODGING.
6. APPLIES AT -A-
7. APPLIES WHEN THE HEADER IS STRAIGHT.
8. PLASTIC PROJECTIONS PERMITTED IN THIS ZONE.
9. COORDINATE DIMENSIONS APPLIES FROM CENTER OF THE ACTUAL FEATURE.
10. SOLDER SIDE OF BOARD IS SHOWN.
11. PLATING: GOLD PLATE AREA, 0.00076 [.000030] GOLD OR 0.00008 [.000003] MIN GOLD FLASH OVER 0.00068 [.000027] PALLADIUM NICKEL, PER TE CONNECTIVITY'S DISCRETION, ALL SIDES, OVER NICKEL UNDERPLATE, 0.00127 [.000050] MIN, ALL SIDES AND ENTIRE LENGTH OF POST.
12. PLATING: BRIGHT TIN-LEAD (93/7) PLATE AREA, 0.00381-0.00889 [.000150-.000350] THICK, ALL FOUR SIDES, 3.18 [.125] MINIMUM.
13. DIMENSIONS IN BRACKETS ARE IN INCHES.
14. ALL POSITION SIZES HAVE THE BACK WALL NOTCHED ON BOTH ENDS AS SHOWN. THE 2 THRU 5 POSITION SIZES HAVE SOLID BACK WALLS. POSITION SIZES 6 AND ABOVE HAVE AN INTERRUPTED BACK WALLS AT VARIOUS LOCATIONS (SEE TABLE FOR INTERRUPTION(S) LOCATIONS).
15. EDGE OF POLARIZING LOCK WALL TO BE IN LINE WITH CENTERLINE OF ADJACENT POST WITHIN ±0.13 [.005].
16. PLATING: MATTE TIN PLATE AREA, 0.00381-0.00889 [.000150-.000350] THICK, ALL FOUR SIDES, 3.18 [.125] MINIMUM.
17. OBSOLETE PARTS: OBSOLETE CIS STREAMLINING PER D.RENAUD/D.SINISI

BACK WALL INTERRUPTIONS BETWEEN POSTS				(L)	NO.OF POSN	ASSEMBLY
4&5	7&8	11&12	14&15	71.20 [2.803]	18	4-644627-8
4&5	7&8	10&11	13&14	67.23 [2.647]	17	4-644627-7
4&5	8&9	12&13		63.27 [2.491]	16	4-644627-6
4&5	8&9	11&12		59.31 [2.335]	15	4-644627-5
4&5	7&8	10&11		55.35 [2.179]	14	4-644627-4
4&5	7&8	10&11		51.38 [2.023]	13	4-644627-3
4&5	8&9			47.42 [1.867]	12	4-644627-2
4&5	7&8			43.46 [1.711]	11	4-644627-1
3&4	7&8			39.50 [1.555]	10	4-644627-0
3&4	6&7			35.53 [1.399]	9	3-644627-9
4&5				31.57 [1.243]	8	3-644627-8
4&5				27.61 [1.087]	7	3-644627-7
3&4				23.65 [.931]	6	3-644627-6
	NONE			19.69 [.775]	5	3-644627-5
	NONE			15.72 [.619]	4	3-644627-4
	NONE			11.76 [.463]	3	3-644627-3
	NONE			7.80 [.307]	2	3-644627-2

SUPERSEDED

BACK WALL INTERRUPTIONS BETWEEN POSTS				(L)	NO.OF POSN	ASSEMBLY
4&5	7&8	11&12	14&15	71.20 [2.803]	18	~~1-644627-8~~
4&5	7&8	10&11	13&14	67.23 [2.647]	17	~~1-644627-7~~
4&5	8&9	12&13		63.27 [2.491]	16	~~1-644627-6~~
4&5	8&9	11&12		59.31 [2.335]	15	~~1-644627-5~~
4&5	7&8	10&11		55.35 [2.179]	14	~~1-644627-4~~
4&5	7&8	10&11		51.38 [2.023]	13	~~1-644627-3~~
4&5	8&9			47.42 [1.867]	12	~~1-644627-2~~
4&5	7&8			43.46 [1.711]	11	~~1-644627-1~~
3&4	7&8			39.50 [1.555]	10	~~1-644627-0~~
3&4	6&7			35.53 [1.399]	9	~~644627-9~~
4&5				31.57 [1.243]	8	~~644627-8~~
4&5				27.61 [1.087]	7	~~644627-7~~
3&4				23.65 [.931]	6	~~644627-6~~
	NONE			19.69 [.775]	5	~~644627-5~~
	NONE			15.72 [.619]	4	~~644627-4~~
	NONE			11.76 [.463]	3	~~644627-3~~
	NONE			7.80 [.307]	2	~~644627-2~~

METRIC

THIS DRAWING IS A CONTROLLED DOCUMENT

DR	K. HOOKER	02-FEB-2009
CK	D. ROSSI	02-FEB-2009
APD	D. ROSSI	02-FEB-2009
MFG		
QA		

DIMENSIONS: mm [INCHES]

PROJECTION: 1 2

MATERIAL: 1

FINISH: 2

DRAWING SPEC:

WEIGHT:

CUSTOMER DRAWING

TE Connectivity

MTA-.156 HEADER ASSEMBLY, STRAIGHT, .045 SQUARE POST, .000030 GOLD PLATED, WITHOUT RETENTION PEGS

SIZE: A2 | DWG CODE: 00779 | DRAWING NO: 644627 | REPLACES TO: —

SCALE: 1:1 | SHEET: 1 of 1 | REV: E

Downloaded from Elcodis.com electronic components distributor