THIS DRAWING IS UNPUBLISHED. RELEASED FOR PUBLICATION .19 .
© COPYRIGHT 19 BY AMP INCORPORATED. ALL RIGHTS RESERVED.

| LOC | DIST |
|---|---|
| CM | 00 |

REVISIONS

| F | LTR | DESCRIPTION | DATE | DWN | APVD |
|---|---|---|---|---|---|
| | B | REVISED PER 0G3B-0205-05 | 25-APR-05 | KW | CJ |

1. MATERIAL: CONTACTS - BRASS
HOUSING - UL 94V-O RATED HIGH TEMP NYLON, COLOR BLACK.

2. PLATING: CONTACTS - 0.38µm MINIMUM GOLD ON MATING AREA, 2.5µm MINIMUM TIN LEAD ON SOLDER TAILS, BOTH OVER 1.27µm MINIMUM NICKEL.

4. RECOMMENDED PC BOARD THICKNESS OF 1.57.

5. PLATING: CONTACTS - 0.38µm MINIMUM GOLD ON MATING AREA, 2.5µm MINIMUM MATTE TIN ON SOLDER TAILS, BOTH OVER 1.27µm MINIMUM NICKEL.

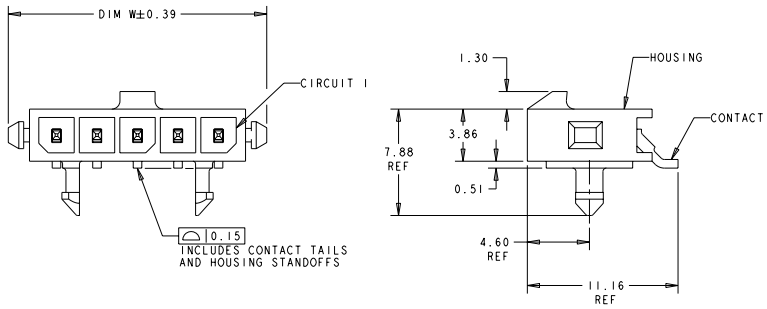


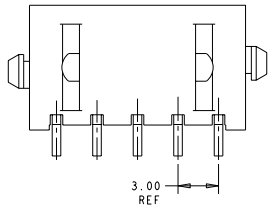


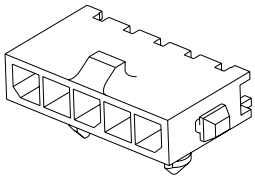

| | | | | | |
|---|---|---|---|---|---|
| 5 | 33.00 | 28.70 | 40.00 | 12 | 3-1445092-2 |
| 5 | 30.00 | 25.70 | 37.00 | 11 | 3-1445092-1 |
| 5 | 27.00 | 22.70 | 34.00 | 10 | 3-1445092-0 |
| 5 | 24.00 | 19.70 | 31.00 | 9 | 2-1445092-9 |
| 5 | 21.00 | 16.70 | 28.00 | 8 | 2-1445092-8 |
| 5 | 18.00 | 13.70 | 25.00 | 7 | 2-1445092-7 |
| 5 | 15.00 | 10.70 | 22.00 | 6 | 2-1445092-6 |
| 5 | 12.00 | 7.70 | 19.00 | 5 | 2-1445092-5 |
| 5 | 9.00 | 4.70 | 16.00 | 4 | 2-1445092-4 |
| 5 | - | - | 13.00 | 3 | 2-1445092-3 |
| 5 | - | - | 10.00 | 2 | 2-1445092-2 |
| 2 | 33.00 | 28.70 | 40.00 | 12 | 1-1445092-2 |
| 2 | 30.00 | 25.70 | 37.00 | 11 | 1-1445092-1 |
| 2 | 27.00 | 22.70 | 34.00 | 10 | 1-1445092-0 |
| 2 | 24.00 | 19.70 | 31.00 | 9 | 1445092-9 |
| 2 | 21.00 | 16.70 | 28.00 | 8 | 1445092-8 |
| 2 | 18.00 | 13.70 | 25.00 | 7 | 1445092-7 |
| 2 | 15.00 | 10.70 | 22.00 | 6 | 1445092-6 |
| 2 | 12.00 | 7.70 | 19.00 | 5 | 1445092-5 |
| 2 | 9.00 | 4.70 | 16.00 | 4 | 1445092-4 |
| 2 | - | - | 13.00 | 3 | 1445092-3 |
| 2 | - | - | 10.00 | 2 | 1445092-2 |
| FINISH | DIM Z | DIM V | DIM W | NO. OF POSN | PART NUMBER |

THIS DRAWING IS A CONTROLLED DOCUMENT FOR AMP INCORPORATED. REFER TO ANY PRINTED COPY OF THIS DOCUMENT TO ENSURE YOUR ORGANIZATION SHOULD BE CONTACTED FOR THE LATEST REVISION.

DIMENSIONS: mm

TOLERANCES UNLESS OTHERWISE SPECIFIED:
0 PLC ±-
1 PLC ±-
2 PLC ±0.13
3 PLC ±-
4 PLC ±-
ANGLES ±-

MATERIAL - 1
FINISH - SEE TABLE

METRIC

DWN J. ROOT 09OCT2000
CHK K. WHITAKER 17-APR-2001
APVD C. JONES 17-APR-2001
PRODUCT SPEC -
APPLICATION SPEC -
WEIGHT -

AMP
Tyco Electronics
Harrisburg, PA 17105-3608

NAME RT ANGLE SURFACE MOUNT HEADER ASSY, 0.38 MIC GOLD CONTACTS,W/PLASTIC HOLDDOWNS,SGL ROW,MICRO MATE-N-LOK TM

SIZE A2 | CAGE CODE 00779 | DRAWING NO C-1445092

CUSTOMER DRAWING | SCALE 5:1 | SHEET 1 OF 2 | REV B

AMP 1471-9 REV 09MAY94

Downloaded from Elcodis.com electronic components distributor

THIS DRAWING IS UNPUBLISHED. RELEASED FOR PUBLICATION .19 .
© COPYRIGHT 19 BY AMP INCORPORATED. ALL RIGHTS RESERVED.

| LOC | DIST |
|---|---|
| CM | 00 |

REVISIONS

| P | LTR | DESCRIPTION | DATE | DWN | APVD |
|---|---|---|---|---|---|
| | - | SEE SHEET 1 | - | - | - |

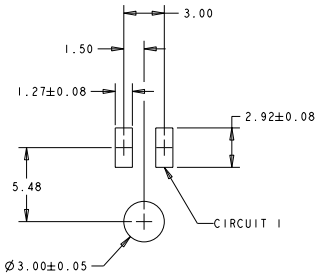


PCB LAYOUT FOR 2 POSITION 4
COMPONENT SIDE

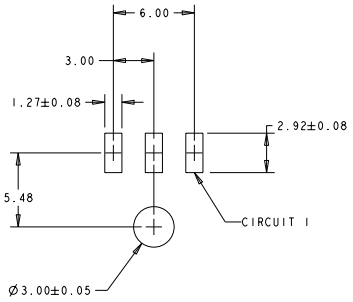


PCB LAYOUT FOR 3 POSITION 4
COMPONENT SIDE

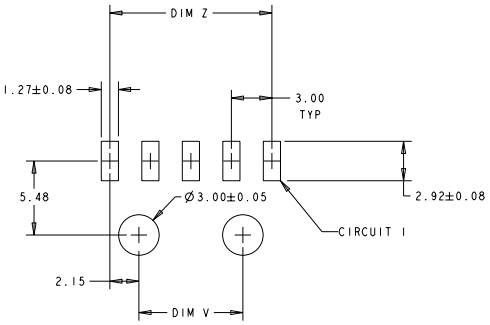


PCB LAYOUT FOR 4-12 POSITION 4
COMPONENT SIDE

METRIC

THIS DRAWING IS CONTROLLED DOCUMENT FOR AMP INCORPORATED. ANY PRINTED COPY OF THIS DOCUMENT IS UNCONTROLLED. ORGANIZATION SHOULD BE CONTACTED FOR THE LATEST REVISION.

DIMENSIONS: mm

TOLERANCES UNLESS OTHERWISE SPECIFIED:

| | |
|---|---|
| 0 PLC | ±- |
| 1 PLC | ±- |
| 2 PLC | ±0.13 |
| 3 PLC | ±- |
| 4 PLC | ±- |
| ANGLES | ±- |

MATERIAL - 1

FINISH - SEE TABLE

DWN J. ROOT 09OCT2000
CHK K. WHITAKER 17-APR-2001
APVD C. JONES 17-APR-2001
PRODUCT SPEC -
APPLICATION SPEC -
WEIGHT -

AMP Tyco Electronics Harrisburg, PA 17105-3608

NAME RT ANGLE SURFACE MOUNT HEADER ASSY, 0.38 MIC GOLD CONTACTS,W/PLASTIC HOLDDOWNS,SGL ROW,MICRO MATE-N-LOK TM

SIZE A2 CAGE CODE 00779 DRAWING NO C-1445092

CUSTOMER DRAWING SCALE 5:1 SHEET 2 OF 2 REV B

AMP 1471-9 REV 09MAY94

Downloaded from Elcodis.com electronic components distributor