THIS DRAWING IS UNPUBLISHED. RELEASED FOR PUBLICATION -.-.-
© COPYRIGHT - BY TYCO ELECTRONICS CORPORATION. ALL RIGHTS RESERVED.

UOC	DIST
AD	00

REVISIONS

P	LTR	DESCRIPTION	DATE	DWN	APVD
	H5	REVISED PER ECO-10-020016	040CT10	HMR	JO

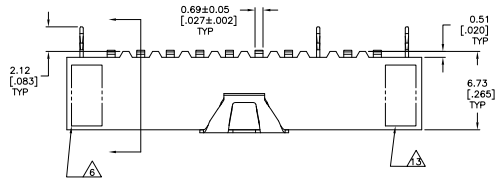

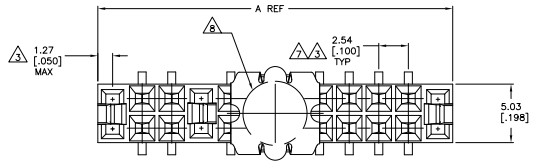

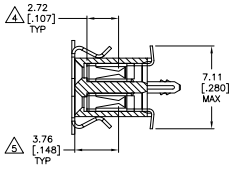

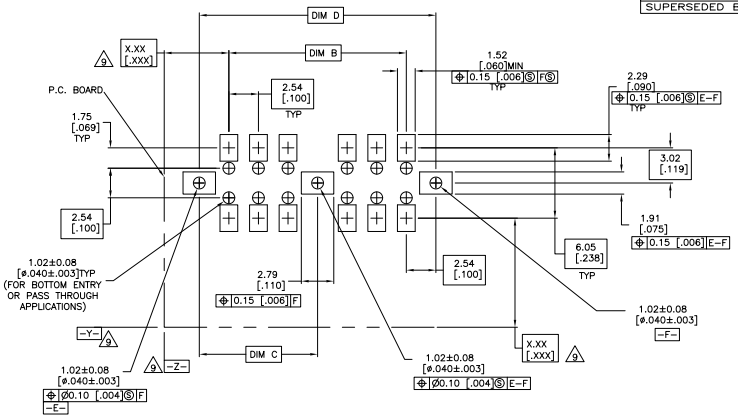

RECOMMENDED PC BOARD PAD PATTERN
0.20[.008] THICK STENCIL

SUPERSEDED BY 4-147102-0										~~4-147747-0~~
SUPERSEDED BY 3-147102-9		N/A	104.14 [4.100]	50.80 [2.000]	99.06 [3.900]	106.68 [4.200]	80	~~3-147747-9~~
SUPERSEDED BY 3-147102-8			101.60 [4.000]	50.80 [2.000]	96.52 [3.800]	104.14 [4.100]	78	~~3-147747-8~~
			99.06 [3.900]	48.26 [1.900]	93.98 [3.700]	101.6 [4.000]	76	~~3-147747-7~~
			96.52 [3.800]	48.26 [1.900]	91.44 [3.600]	99.06 [3.900]	74	3-147747-6
			93.98 [3.700]	45.72 [1.800]	88.9 [3.500]	96.52 [3.800]	72	3-147747-5
		120mm	88.90 [3.500]		83.82 [3.300]	91.44 [3.600]	70	3-147747-4
			86.36 [3.400]		81.28 [3.200]	88.9 [3.500]	68	3-147747-3
			83.82 [3.300]		78.74 [3.100]	86.36 [3.400]	66	3-147747-2
			81.28 [3.200]		76.2 [3.000]	83.82 [3.300]	64	3-147747-1
			78.74 [3.100]		71.12 [2.900]	81.28 [3.200]	62	3-147747-0
			76.20 [3.000]		71.12 [2.800]	78.74 [3.100]	60	2-147747-9
			71.12 [2.900]		68.58 [2.700]	76.2 [3.000]	58	2-147747-8
			71.12 [2.800]		66.04 [2.600]	71.12 [2.900]	56	2-147747-7
			68.58 [2.700]		63.5 [2.500]	71.12 [2.800]	54	2-147747-6
			66.04 [2.600]		60.96 [2.400]	68.58 [2.700]	52	2-147747-5
		88mm	63.50 [2.500]		58.42 [2.300]	66.04 [2.600]	50	2-147747-4
			60.96 [2.400]		55.88 [2.200]	63.5 [2.500]	48	2-147747-3
			58.42 [2.300]		53.34 [2.100]	60.96 [2.400]	46	2-147747-2
			55.88 [2.200]		50.8 [2.000]	58.42 [2.300]	44	2-147747-1
			53.34 [2.100]		48.26 [1.900]	55.88 [2.200]	42	2-147747-0
			50.80 [2.000]		45.72 [1.800]	53.34 [2.100]	40	1-147747-9
			48.26 [1.900]		43.18 [1.700]	50.8 [2.000]	38	1-147747-8
		72mm	45.72 [1.800]		40.64 [1.600]	48.26 [1.900]	36	1-147747-7
			43.18 [1.700]		38.1 [1.500]	45.72 [1.800]	34	1-147747-6
			40.64 [1.600]		35.56 [1.400]	43.18 [1.700]	32	1-147747-5
			38.10 [1.500]		33.02 [1.300]	40.64 [1.600]	30	1-147747-4
			35.56 [1.400]		30.48 [1.200]	38.1 [1.500]	28	1-147747-3
			33.02 [1.300]		27.94 [1.100]	35.56 [1.400]	26	1-147747-2
			30.48 [1.200]		25.4 [1.000]	33.02 [1.300]	24	1-147747-1
			27.94 [1.100]		22.86 [.900]	30.48 [1.200]	22	1-147747-0
			25.40 [1.000]		20.32 [.800]	27.94 [1.100]	20	147747-9
			22.86 [.900]		17.78 [.700]	25.4 [1.000]	18	147747-8
		44mm	20.32 [.800]		15.24 [.600]	22.86 [.900]	16	147747-7
			17.78 [.700]		12.7 [.500]	20.32 [.800]	14	147747-6
			15.24 [.600]		10.16 [.400]	17.78 [.700]	12	147747-5
			12.70 [.500]		7.62 [.300]	15.24 [.600]	10	147747-4
			10.16 [.400]		5.08 [.200]	12.7 [.500]	8	147747-3
			7.62 [.300]		2.54 [.100]	10.16 [.400]	6	147747-2
		24mm	5.08 [.200]		–	7.62 [.300]	4	147747-1
							2	147747-1
	FINISH	EIA TAPE WIDTH	D	C	B	A	NO OF POSN	PART NUMBER

THIS DRAWING IS A CONTROLLED DOCUMENT.

DIMENSIONS: mm [INCHES]

TOLERANCE UNLESS OTHERWISE SPECIFIED:
0 PLC ± –
1 PLC ± –
2 PLC ± –
3 PLC ± 0.25[.010]
4 PLC ± 0.005[.018]
ANGLES ±

MATERIAL 1

FINISH 2 15

TYP M.BINNER 20MAY02
CHK J.OLSON 20MAY02
APVD J.OLSON 20MAY02

PRODUCT SPEC 108-25022
APPLICATION SPEC 114-25018
WEIGHT –

Tyco Electronics Corporation
Harrisburg, Pa 17105-3608

NAME 27APR10
VERTICAL, DUAL ENTRY, .100X.100 C/L, SURFACE MOUNT, AMPMODU

SIZE A1 CAGE CODE 00779 DRAWING NO C-147747 RESTRICTED TO –

CUSTOMER DRAWING SCALE 6:1 SHEET 1 OF 2 REV H5

Downloaded from Elcodis.com electronic components distributor

THIS DRAWING IS UNPUBLISHED. RELEASED FOR PUBLICATION -.-- -
© COPYRIGHT - BY TYCO ELECTRONICS CORPORATION. ALL RIGHTS RESERVED.

LOC	DIST
AD	00

REVISIONS

P	LTR	DESCRIPTION	DATE	DWN	APVD
–		SEE SHEET 1	–	–	–

1. HOUSING: GLASS FILLED, FLAME RETARDANT POLYESTER, BLACK
CONTACTS: PHOSPHOR BRONZE.
VACUUM COVER: STAINLESS STEEL

2. CONTACTS: DUPLEX PLATED– 0.76µm[.000030] GOLD IN CONTACT AREA, 3.81–7.62µm [.000150–.000300] BRIGHT TIN–LEAD ON, LEADS, ALL OVER 1.27µm [.000050] MIN NICKEL.

3. DIMENSION APPLIES TO HOUSING CAVITY CENTERLINES ONLY.

4. POINT OF MEASUREMENT FOR PLATING THICKNESS.

5. POINT OF CONTACT DIMENSION.

6. TE PART NUMBER AND DATE CODE ARE MARKED IN APPROXIMATE LOCATION SHOWN.

7. TOLERANCE IS NON–CUMULATIVE.

8. 5.5 [.217] MIN TARGET AREA FOR VACUUM PICK–UP COVERS TO BE REMOVED AFTER SOLDERING.

9. DATUMS AND BASIC DIMENSIONS ESTABLISHED BY CUSTOMER.

10. NO CENTER HOLD DOWNS

11 PACKAGED IN TAPES AND REEL PER EIA 481 SPECIFICATIONS.

12. FOR 2 POS, DATE CODE IS STAMPED OPPOSITE SIDE OF TE LOGO.

13. TE TRADEMARK AND CSA LOGO ARE MOLDED INTO HOUSING.

14. NO PART NUMBER MARKING REQUIRED ON THIS PART.

15. CONTACTS: DUPLEX PLATED–0.76µm[.000030] GOLD IN CONTACT AREA, 3.81–7.62µm [.000150–.000300] MATTE TIN ON LEADS, ALL OVER 1.27µm [.000050] MIN NICKEL.

16. ROHS 2002/95/EC COMPLIANT

17. OBSOLETE PARTS: OBSOLETE CIS STREAMLINING PER D.RENAUD/D.SINISI

SUPERSEDED BY 9–147102–0	17	N/A	106.68 [4.200]	53.34 [2.100]	101.6 [4.000]	109.22 [4.300]	80	17	~~9–147747~~–0
SUPERSEDED BY 8–147102–9	17		104.14 [4.100]	50.8 [2.000]	99.06 [3.900]	106.68 [4.200]	78	17	~~8–147747~~–9
SUPERSEDED BY 8–147102–8	17		101.6 [4.000]	50.8 [2.000]	96.52 [3.800]	104.14 [4.100]	76	17	~~8–147747~~–8
	17	120mm	99.06 [3.900]	48.26 [1.900]	93.98 [3.700]	101.6 [4.000]	74	17	8–147747–7
	17		96.52 [3.800]	48.26 [1.900]	91.44 [3.600]	99.06 [3.900]	72	17	8–147747–6
	17		93.98 [3.700]	45.72 [1.800]	88.9 [3.500]	96.52 [3.800]	70	17	8–147747–5
	17		88.9 [3.500]	17	83.82 [3.300]	91.44 [3.600]	68	17	8–147747–4
	17		86.36 [3.400]	17	81.28 [3.200]	88.9 [3.500]	66	17	8–147747–3
	17		83.82 [3.300]	17	78.74 [3.100]	86.36 [3.400]	64	17	8–147747–2
	17		81.28 [3.200]	17	76.2 [3.000]	83.82 [3.300]	62	17	8–147747–1
	17		78.74 [3.100]	17	71.12 [2.900]	81.28 [3.200]	60	17	8–147747–0
	17		76.2 [3.000]	17	71.12 [2.800]	78.74 [3.100]	58	17	7–147747–9
	17		71.12 [2.900]	17	68.58 [2.700]	76.2 [3.000]	56	17	7–147747–8
	17	88mm	71.12 [2.800]	17	66.04 [2.600]	71.12 [2.900]	54	17	7–147747–7
	17		68.58 [2.700]	17	63.5 [2.500]	71.12 [2.800]	52	17	7–147747–6
	17		66.04 [2.600]	17	60.96 [2.400]	68.58 [2.700]	50	17	7–147747–5
	17		63.5 [2.500]	17	58.42 [2.300]	66.04 [2.600]	48	17	7–147747–4
	17		60.96 [2.400]	17	55.88 [2.200]	63.5 [2.500]	46	17	7–147747–3
	17		58.42 [2.300]	17	53.34 [2.100]	60.96 [2.400]	44	17	7–147747–2
	17	72mm	55.88 [2.200]	17	50.8 [2.000]	58.42 [2.300]	42	17	7–147747–1
	17		53.34 [2.100]	17	48.26 [1.900]	55.88 [2.200]	40	17	7–147747–0
	17		50.8 [2.000]	17	45.72 [1.800]	53.34 [2.100]	38	17	6–147747–9
	17		48.26 [1.900]	17	43.18 [1.700]	50.8 [2.000]	36	17	6–147747–8
	17		45.72 [1.800]	17	40.64 [1.600]	48.26 [1.900]	34	17	6–147747–7
	17		43.18 [1.700]	17	38.1 [1.500]	45.72 [1.800]	32	17	6–147747–6
	17		40.64 [1.600]	17	35.56 [1.400]	43.18 [1.700]	30	17	6–147747–5
	17		38.1 [1.500]	17	33.02 [1.300]	40.64 [1.600]	28	17	6–147747–4
	17		35.56 [1.400]	17	30.48 [1.200]	38.1 [1.500]	26	17	6–147747–3
	17		33.02 [1.300]	17	27.94 [1.100]	35.56 [1.400]	24	17	6–147747–2
	17	44mm	30.48 [1.200]	17	25.4 [1.000]	33.02 [1.300]	22	17	6–147747–1
	17		27.94 [1.100]	17	22.86 [.900]	30.48 [1.200]	20	17	6–147747–0
	17		25.4 [1.000]	17	20.32 [.800]	27.94 [1.100]	18	17	5–147747–9
	17		22.86 [.900]	17	17.78 [.700]	25.4 [1.000]	16	17	5–147747–8
	17		20.32 [.800]	17	15.24 [.600]	22.86 [.900]	14	17	5–147747–7
	17		17.78 [.700]	17	12.7 [.500]	20.32 [.800]	12	17	5–147747–6
14	17		15.24 [.600]	17	10.16 [.400]	17.78 [.700]	10	17	5–147747–5
14	17		12.7 [.500]	17	7.62 [.300]	15.24 [.600]	8	17	5–147747–4
14	17		10.16 [.400]	17	5.08 [.200]	12.7 [.500]	6	17	5–147747–3
14	17		7.62 [.300]	17	2.54 [.100]	10.16 [.400]	4	17	5–147747–2
12 14	17	24mm	5.08 [.200]	17	–	7.62 [.300]	2	17	5–147747–1
		FINISH	EIA TAPE WIDTH	D	C	B	A	NO OF POSN	PART NUMBER

THIS DRAWING IS A CONTROLLED DOCUMENT.

DIMENSIONS: mm [INCHES]

TOLERANCE UNLESS OTHERWISE SPECIFIED:
0 PLC ± –
1 PLC ± –
2 PLC ± –
3 PLC ± 0.25[.010]
4 PLC ± 0.005[.010]
ANGLES ±

MATERIAL 1

FINISH 2 15

TITLE M.BINNER 20MAY02
DR J.OLSON 20MAY02
APVD J.OLSON 20MAY02
PRODUCT SPEC 108–25022
APPLICATION SPEC 114–25018
WEIGHT –

Tyco Electronics Corporation
Harrisburg, Pa 17105–3608

NAME RCPT ASSY, MOD IV, DOUBLE ROW, VERTICAL, DUAL ENTRY, .100X.100 C/L, SURFACE MOUNT, AMPMODU

SIZE A1 CAGE CODE 00779 DRAWING NO C–147747 RESTRICTED TO –

CUSTOMER DRAWING SCALE 1:1 SHEET 2 OF 2 REV H5

Downloaded from Elcodis.com electronic components distributor