THIS DRAWING IS UNPUBLISHED. RELEASED FOR PUBLICATION -.-.-
© COPYRIGHT - By - ALL RIGHTS RESERVED

UOC	DIST	REVISIONS					
AD	00	P	LTR	DESCRIPTION	DATE	DWN	APVD
			E1	REVISED PER ECO-11-004587	11MAR11	RK	HMR

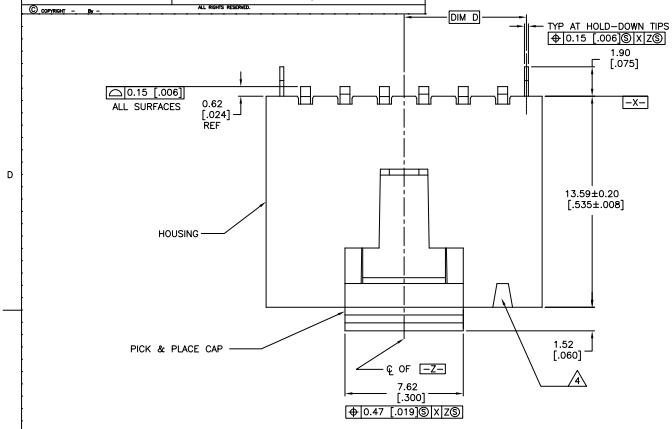

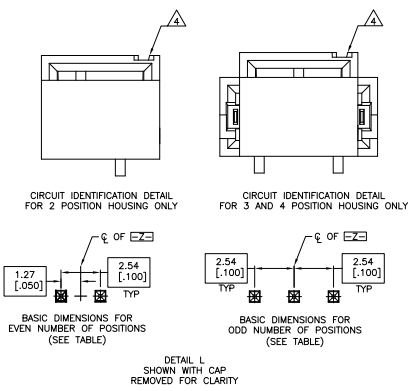

1. PACKAGE: TAPE AND REEL PER EIA-481 SPECIFICATIONS. SEE TABLE FOR TAPE WIDTHS

2. MATERIAL: HOUSING AND PICK & PLACE CAP: HIGH TEMPERATURE THERMOPLASTIC, COLOR - BLACK, CONTACTS: BRASS, HOLD-DOWNS: BERYLLIUM COPPER

3. FINISH: CONTACTS: 0.000381 [.000015] GOLD IN CONTACT AREA, 0.00254[.0001] MATTE TIN-LEAD ON SOLDER TAIL ALL OVER 0.00127[.00005] NICKEL
HOLD-DOWNS: 0.00381[.00015] MATTE TIN-LEAD OVER 0.00127[.00005] NICKEL

4. CIRCUIT POSITION #1 IDENTIFICATION MARK

5. DATUMS AND BASIC DIMENSIONS ARE ESTABLISHED BY CUSTOMER

6. RECOMMENDED PC BOARD THICKNESS OF 1.57[.062]

7. USE 1.510 ±0.025[.0595±.0010] DRILLED HOLE (#53 DRILL), FINISH TO BE TIN-LEAD OVER 0.02[.0008] MIN COPPER

8. FINISH: CONTACTS: 0.000381 [.000015] GOLD IN CONTACT AREA, 0.00254[.0001] MATTE TIN ON SOLDER TAIL ALL OVER 0.00127[.00005] NICKEL
HOLD-DOWNS: 0.00381[.00015] MATTE TIN OVER 0.00127[.00005] NICKEL

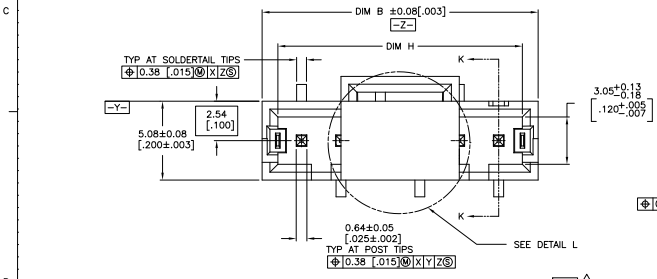

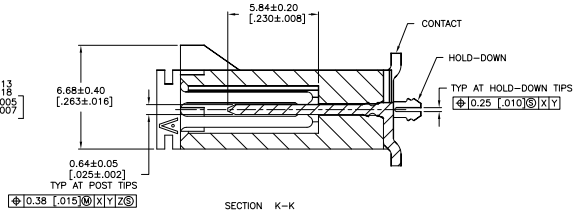

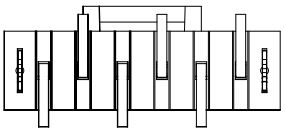

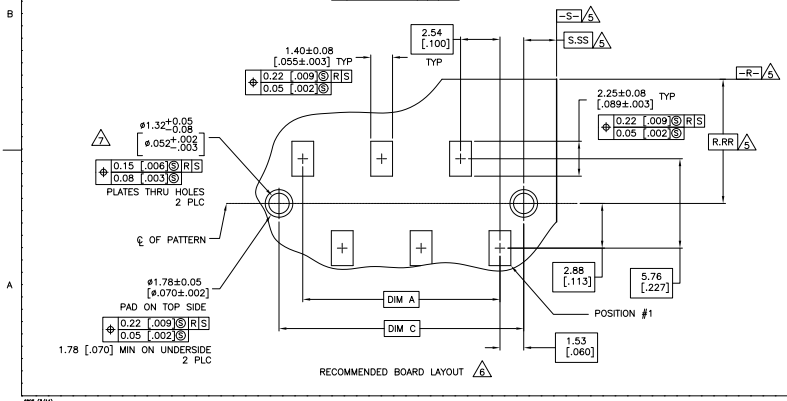

RECOMMENDED BOARD LAYOUT 6

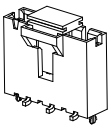

SCALE 5:1

THIS DRAWING IS A CONTROLLED DOCUMENT.	TYPE J. MOSER 28OCT99	TE Connectivity	
DIMENSIONS: mm [INCHES]	DWN J. BRESKOSKY 28OCT99		
	TOLERANCE UNLESS OTHERWISE SPECIFIED	APVD K. WRIGHT 27JUN00	NAME AMPMODU MTE SURFACE MOUNT. VERTICAL HEADER ASSEMBLY -
	0 PLC ± - 1 PLC ± - 2 PLC ± 0.13 [.005] 3 PLC ± - 4 PLC ± - ANGLES ± -	PRODUCT SPEC 108-25034-2 APPLICATION SPEC 114-25026	SIZE A1 CAGE CODE 00779 DRAWING NO C-1375582 RESTRICTED TO —
MATERIAL 2	FINISH SEE TABLE	WEIGHT -	CUSTOMER DRAWING SCALE 8:1 SHEET 1 OF 2 REV E1

4MOS (3/11)

Downloaded from Elcodis.com electronic components distributor

THIS DRAWING IS UNPUBLISHED.	RELEASED FOR PUBLICATION -.-.-
© COPYRIGHT - By -	ALL RIGHTS RESERVED

LOC	DIST
AD	00

REVISIONS

P	LTR	DESCRIPTION	DATE	DWN	APVD
	-	SEE SHEET 1	-	-	-

	88 [3.465]	64.01 [2.530]	32.01 [1.260]	64.02 [2.520]	66.04 [2.600]	60.96 [2.400]	25	7-1375582-4
	88 [3.465]	61.47 [2.420]	30.74 [1.210]	61.48 [2.420]	63.50 [2.500]	58.42 [2.300]	24	7-1375582-3
	88 [3.465]	58.93 [2.320]	29.47 [1.160]	58.94 [2.320]	60.96 [2.400]	55.88 [2.200]	23	7-1375582-2
	88 [3.465]	56.39 [2.220]	28.20 [1.110]	56.40 [2.220]	58.42 [2.300]	53.34 [2.100]	22	7-1375582-1
	88 [3.465]	53.85 [2.120]	26.93 [1.060]	53.86 [2.120]	55.88 [2.200]	50.80 [2.000]	21	7-1375582-0
	72 [2.835]	51.31 [2.020]	25.66 [1.010]	51.32 [2.020]	53.34 [2.100]	48.26 [1.900]	20	6-1375582-9
	72 [2.835]	48.77 [1.920]	24.39 [.960]	48.78 [1.920]	50.80 [2.000]	45.72 [1.800]	19	6-1375582-8
	72 [2.835]	46.23 [1.820]	23.12 [.910]	46.24 [1.820]	48.26 [1.900]	43.18 [1.700]	18	6-1375582-7
	72 [2.835]	43.69 [1.720]	21.85 [.860]	43.70 [1.720]	45.72 [1.800]	40.64 [1.600]	17	6-1375582-6
	72 [2.835]	41.15 [1.620]	20.58 [.810]	41.16 [1.620]	43.18 [1.700]	38.10 [1.500]	16	6-1375582-5
	56 [2.205]	38.61 [1.520]	19.31 [.760]	38.62 [1.520]	40.64 [1.600]	35.56 [1.400]	15	6-1375582-4
	56 [2.205]	36.07 [1.420]	18.04 [.710]	36.08 [1.420]	38.10 [1.500]	33.02 [1.300]	14	6-1375582-3
	56 [2.205]	33.53 [1.320]	16.77 [.660]	33.54 [1.320]	35.56 [1.400]	30.48 [1.200]	13	6-1375582-2
	56 [2.205]	30.99 [1.220]	15.50 [.610]	31.00 [1.220]	33.02 [1.300]	27.94 [1.100]	12	6-1375582-1
	56 [2.205]	28.45 [1.120]	14.23 [.560]	28.46 [1.120]	30.48 [1.200]	25.40 [1.000]	11	6-1375582-0
	56 [2.205]	25.91 [1.020]	12.96 [.510]	25.92 [1.020]	27.94 [1.100]	22.86 [.900]	10	5-1375582-9
	44 [1.732]	23.37 [.920]	11.69 [.460]	23.38 [.920]	25.40 [1.000]	20.32 [.800]	9	5-1375582-8
	44 [1.732]	20.83 [.820]	10.42 [.410]	20.84 [.820]	22.86 [.900]	17.78 [.700]	8	5-1375582-7
	44 [1.732]	18.29 [.720]	9.15 [.360]	18.30 [.720]	20.32 [.800]	15.24 [.600]	7	5-1375582-6
	32 [1.260]	15.75 [.620]	7.88 [.310]	15.76 [.620]	17.78 [.700]	12.70 [.500]	6	5-1375582-5
	32 [1.260]	13.21 [.520]	6.61 [.260]	13.22 [.520]	15.24 [.600]	10.16 [.400]	5	5-1375582-4
	32 [1.260]	10.67 [.420]	5.34 [.210]	10.68 [.420]	12.70 [.500]	7.62 [.300]	4	5-1375582-3
	32 [1.260]	8.13 [.320]	4.07 [.160]	8.14 [.320]	10.16 [.400]	5.08 [.200]	3	5-1375582-2
	24 [.945]	5.59 [.220]	2.80 [.110]	5.60 [.220]	7.62 [.300]	2.54 [.100]	2	5-1375582-1
	88 [3.465]	64.01 [2.530]	32.01 [1.260]	64.02 [2.520]	66.04 [2.600]	60.96 [2.400]	25	2-1375582-4
	88 [3.465]	61.47 [2.420]	30.74 [1.210]	61.48 [2.420]	63.50 [2.500]	58.42 [2.300]	24	2-1375582-3
	88 [3.465]	58.93 [2.320]	29.47 [1.160]	58.94 [2.320]	60.96 [2.400]	55.88 [2.200]	23	2-1375582-2
	88 [3.465]	56.39 [2.220]	28.20 [1.110]	56.40 [2.220]	58.42 [2.300]	53.34 [2.100]	22	2-1375582-1
	88 [3.465]	53.85 [2.120]	26.93 [1.060]	53.86 [2.120]	55.88 [2.200]	50.80 [2.000]	21	2-1375582-0
	72 [2.835]	51.31 [2.020]	25.66 [1.010]	51.32 [2.020]	53.34 [2.100]	48.26 [1.900]	20	1-1375582-9
	72 [2.835]	48.77 [1.920]	24.39 [.960]	48.78 [1.920]	50.80 [2.000]	45.72 [1.800]	19	1-1375582-8
	72 [2.835]	46.23 [1.820]	23.12 [.910]	46.24 [1.820]	48.26 [1.900]	43.18 [1.700]	18	1-1375582-7
	72 [2.835]	43.69 [1.720]	21.85 [.860]	43.70 [1.720]	45.72 [1.800]	40.64 [1.600]	17	1-1375582-6
	72 [2.835]	41.15 [1.620]	20.58 [.810]	41.16 [1.620]	43.18 [1.700]	38.10 [1.500]	16	1-1375582-5
	56 [2.205]	38.61 [1.520]	19.31 [.760]	38.62 [1.520]	40.64 [1.600]	35.56 [1.400]	15	1-1375582-4
	56 [2.205]	36.07 [1.420]	18.04 [.710]	36.08 [1.420]	38.10 [1.500]	33.02 [1.300]	14	1-1375582-3
	56 [2.205]	33.53 [1.320]	16.77 [.660]	33.54 [1.320]	35.56 [1.400]	30.48 [1.200]	13	1-1375582-2
	56 [2.205]	30.99 [1.220]	15.50 [.610]	31.00 [1.220]	33.02 [1.300]	27.94 [1.100]	12	1-1375582-1
	56 [2.205]	28.45 [1.120]	14.23 [.560]	28.46 [1.120]	30.48 [1.200]	25.40 [1.000]	11	1-1375582-0
	56 [2.205]	25.91 [1.020]	12.96 [.510]	25.92 [1.020]	27.94 [1.100]	22.86 [.900]	10	1375582-9
	44 [1.732]	23.37 [.920]	11.69 [.460]	23.38 [.920]	25.40 [1.000]	20.32 [.800]	9	1375582-8
	44 [1.732]	20.83 [.820]	10.42 [.410]	20.84 [.820]	22.86 [.900]	17.78 [.700]	8	1375582-7
	44 [1.732]	18.29 [.720]	9.15 [.360]	18.30 [.720]	20.32 [.800]	15.24 [.600]	7	1375582-6
	32 [1.260]	15.75 [.620]	7.88 [.310]	15.76 [.620]	17.78 [.700]	12.70 [.500]	6	1375582-5
	32 [1.260]	13.21 [.520]	6.61 [.260]	13.22 [.520]	15.24 [.600]	10.16 [.400]	5	1375582-4
	32 [1.260]	10.67 [.420]	5.34 [.210]	10.68 [.420]	12.70 [.500]	7.62 [.300]	4	1375582-3
	32 [1.260]	8.13 [.320]	4.07 [.160]	8.14 [.320]	10.16 [.400]	5.08 [.200]	3	1375582-2
	24 [.945]	5.59 [.220]	2.80 [.110]	5.60 [.220]	7.62 [.300]	2.54 [.100]	2	1375582-1
PLATING	TAPE WIDTH	H	D	C	B	A	NO OF POSN	PART NUMBER

THIS DRAWING IS A CONTROLLED DOCUMENT.

DIMENSIONS: mm [INCHES]

MATERIAL: 2

DRAWING UNLESS OTHERWISE SPECIFIED:
0 PLC ± -
1 PLC ± -
2 PLC ± 0.13 [.005]
3 PLC ± -
4 PLC ± -
ANGLES ± -

FINISH: SEE TABLE

TRN: J. MOSER 29OCT99
CHK: L. BRESKOSKY 29OCT99
APD: K. WRIGHT 27JUN00

PRODUCT SPEC: 108-25034-2
APPLICATION SPEC: 114-25026
WEIGHT: -

CUSTOMER DRAWING

TE Connectivity

NAME: AMPMODU MTE SURFACE MOUNT. VERTICAL HEADER ASSEMBLY

SIZE: A1 | CAGE CODE: 00779 | DRAWING NO: C-1375582 | RESTRICTED TO: -

SCALE: 8:1 | SHEET 2 OF 2 | REV: E1

4NOS (3/11)

Downloaded from Elcodis.com electronic components distributor