DRAWING MADE IN THIRD ANGLE PROJECTION

THIS DRAWING IS UNPUBLISHED. RELEASED FOR PUBLICATION
© COPYRIGHT ALL RIGHTS RESERVED.

LOC AD DIST 39

| REVISIONS | | | | | |
|---|---|---|---|---|---|
| P A | F | ZONE | LTR | DESCRIPTION | DATE | APPROVED |
| | | | H2 | REVISED PER ECO-11-005140 | 31MAR11 | HMR |

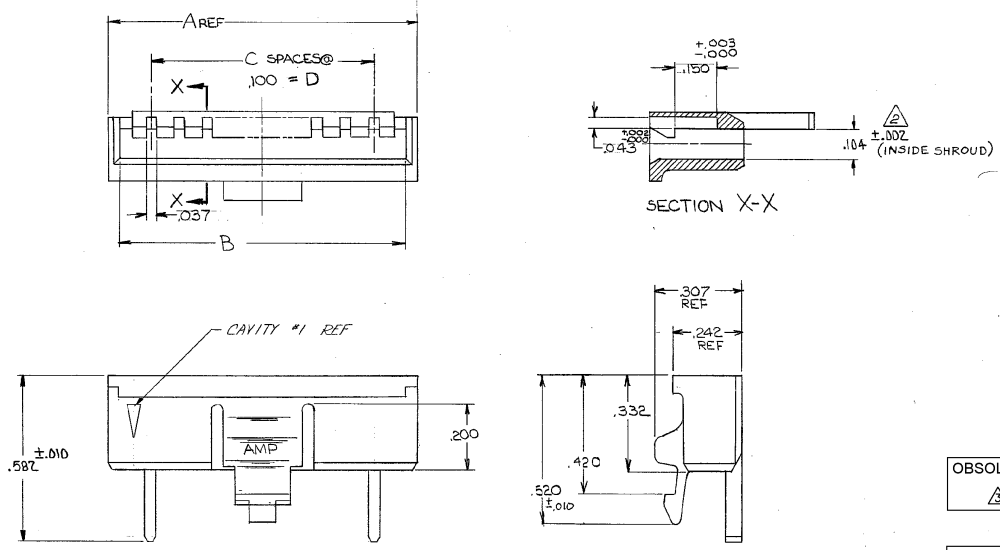


| | | | | | | | |
|---|---|---|---|---|---|---|---|
| | 2.300 | 23 | 2.505 | 2.585 | 25 | 2-103680-2 | |
| | 2.200 | 22 | 2.405 | 2.485 | 24 | 2- | -1 |
| OBSOLETE | 2.100 | 21 | 2.305 | 2.385 | 23 | 2- | -0 |
| | 2.000 | 20 | 2.205 | 2.285 | 22 | 1- | -9 |
| △3 | 1.900 | 19 | 2.105 | 2.185 | 21 | 1- | -8 |
| | 1.800 | 18 | 2.005 | 2.085 | 20 | 1- | -7 |
| | 1.700 | 17 | 1.905 | 1.985 | 19 | 1- | -6 |
| OBSOLETE | 1.600 | 16 | 1.805 | 1.885 | 18 | 1- | -5 |
| △3 | 1.500 | 15 | 1.705 | 1.785 | 17 | 1- | -4 |
| | 1.400 | 14 | 1.605 | 1.685 | 16 | 1- | -3 |
| | 1.300 | 13 | 1.505 | 1.585 | 15 | 1- | -2 |
| △3 OBSOLETE | 1.200 | 12 | 1.405 | 1.485 | 14 | 1- | -1 |
| | 1.100 | 11 | 1.305 | 1.385 | 13 | 1- | -0 |
| | 1.000 | 10 | 1.205 | 1.285 | 12 | | -9 |
| △3 OBSOLETE | .900 | 9 | 1.105 | 1.185 | 11 | | -8 |
| | .800 | 8 | 1.005 | 1.085 | 10 | | -7 |
| △3 OBSOLETE | .700 | 7 | .905 | .985 | 9 | | -6 |
| | .600 | 6 | .805 | .885 | 8 | | -5 |
| △3 OBSOLETE | .500 | 5 | .705 | .785 | 7 | | -4 |
| | .400 | 4 | .605 | .685 | 6 | | -3 |
| | .300 | 3 | .505 | .585 | 5 | | -2 |
| | .200 | 2 | .405 | .485 | 4 | 103680-1 | |
| | D | C | B | A | NO. OF POSN | PART NO | |

103680

1. SHROUD ACCEPTS HOUSINGS WITH GUIDE RIBS.

△2 DIMENSION APPLIES WITH ANY BOW OR WARPAGE IN SHROUD WALLS REMOVED.

△3 OBSOLETE PARTS: OBSOLETE CIS STREAMLINING PER D.RENAUD/D.SINISI

UNLESS OTHERWISE SPECIFIED DIMENSIONS ARE IN INCHES.
TOLERANCES ON:
DECIMALS ±.005
ANGLES ±

MATERIAL
THERMOPLASTIC
COLOR: BLACK

FINISH

CONTRACT NO
DR O Clouser
CHK Ronald P. Lorat 4-22-85
APPD Ronald P. Lorat 4-22-85
APPD Ronald P. Lorat 4-22-85
DSGN APPD
OTHER APPD

TE Connectivity

NAME
SHROUD, COUPLING, SINGLE ROW, AMPMODU MTE

SIZE C | FSCM NO 00779 | DRAWING NO 103680

SCALE | SHEET 1 OF 1

CUSTOMER DRAWING

Downloaded from Elcodis.com electronic components distributor