THIS DRAWING IS UNPUBLISHED. RELEASED FOR PUBLICATION 20
© COPYRIGHT 20 BY - ALL RIGHTS RESERVED.

LOC	DIST
AD	00

REVISIONS

P	LTR	DESCRIPTION	DATE	DRN	APVD
	4	REVISED PER ECO-12-000424	12JAN12	KH	DD

1. MATERIAL:
   HOUSING: LCP, GLASS FILLED, UL94V-0.
   TERMINALS: HIGH PERFORMANCE COPPER ALLOY.
2. FINISH:
   30µ" SELECTIVE GOLD IN CONTACT AREA. SELECTIVE TIN ON PCB TAILS, NICKEL OVERALL.
3. FINISH:
   30µ" SELECTIVE GOLD IN CONTACT AREA. SELECTIVE TIN-LEAD ON PCB TAILS, NICKEL OVERALL.

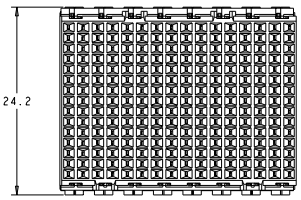

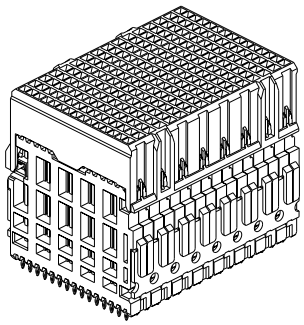

SCALE 4:1

REFER TO WWW.TE.COM FOR PRODUCT AVAILABILITY

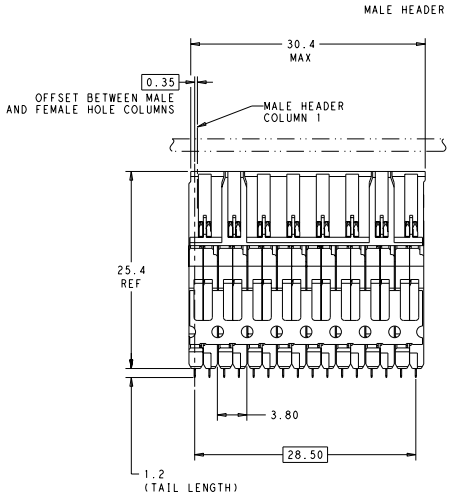

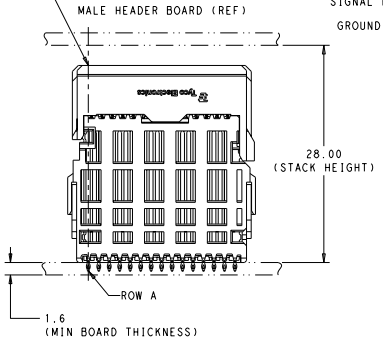

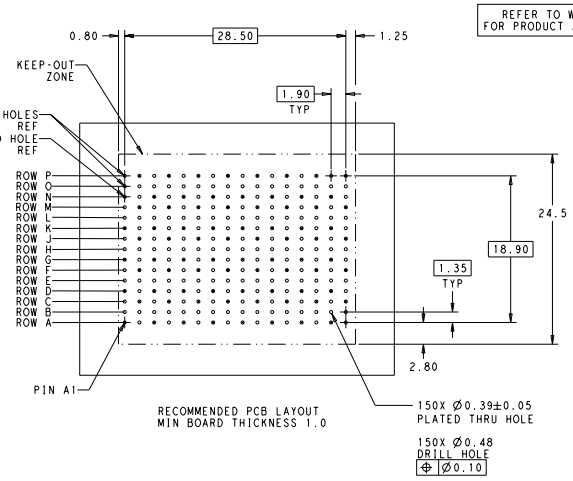

RECOMMENDED PCB LAYOUT
MIN BOARD THICKNESS 1.0

NONE	3	2149394-5
NONE	2	2149394-1
KEY POSITION	FINISH	PART NUMBER

DESIGN APPROVED THIS PRINT IS **PRELIMINARY** TO FIRST PIECE APPROVAL CONTACT PRODUCT ENGINEERING BEFORE USING THIS PRINT

THIS DRAWING IS A CONTROLLED DOCUMENT.

DIMENSIONS: MM

TOLERANCES UNLESS OTHERWISE SPECIFIED:
0 PLC ±-
1 PLC ±0.25
2 PLC ±0.10
3 PLC ±-
4 PLC ±-
ANGLES ±1/2°

MATERIAL 1

FINISH SEE TABLE 2

DRN	K. SHORER	19JAN2011
CHK	D. DIXON	19JAN2011
APV	D. DIXON	19JAN2011

PRODUCT SPEC -
APPLICATION SPEC -
WEIGHT -

TE Connectivity

IMPACT, 5 PAIR, DAUGHTERCARD 28mm 16 COLUMN, UNGUIDED, SIGNAL MODULE, 0.39 EYELET

SIZE	CAGE CODE	DRAWING NO	RESTRICTED TO
A1	00779	C-2149394	-

CUSTOMER DRAWING SCALE 4:1 SHEET 1 OF 1 REV 4

PRELIMINARY

4005 12/11

Pro/ENGINEER DRAWING

Downloaded from Elcodis.com electronic components distributor