THIS DRAWING IS UNPUBLISHED. RELEASED FOR PUBLICATION -.-- .
© COPYRIGHT - BY TYCO ELECTRONICS CORPORATION, ALL RIGHTS RESERVED.

| LTR | DESCRIPTION | DATE | DWN | APVD |
|---|---|---|---|---|
| F | REVISED PER EC 0512-0441-02 | 11FEB03 | JM | GG |

REVISIONS

1. HOUSING & ORGANIZER MATERIAL: LIQUID CRYSTAL POLYMER PER ASTM D5138-LCP000G30A32250, COLOR: BLACK.
2. SIGNAL & POWER/GROUND PLANE CONTACT MATERIAL: PHOSPHOR BRONZE, PER CDA CS1100.
3. CONTACT FINISH:
   ON MATING SURFACES-
   FLASH GOLD PER AMP INCORPORATED SPECIFICATION, OVER
   0.00076 [.000030] MIN. PALLADIUM-NICKEL PER AMP INCORPORATED SPECIFICATION, OVER
   0.00127 [.000050] MIN. NICKEL PER FEDERAL SPECIFICATION QQ-N-290, CLASS: 2, GRADE: n/a.
   ON LEADS-
   0.00381 [.000150] MIN. TIN-LEAD PER MIL-P-81728, OVER
   0.00127 [.000050] MIN. NICKEL PER FEDERAL SPECIFICATION QQ-N-290, CLASS: 2, GRADE: n/a.
4. RECEPTACLE ASSEMBLY SOLDER LEADS ARE OFFSET .015 TOWARD THE LETTER END OF THE CAVITY CENTERLINE. THE PIN ASSEMBLY SOLDER LEADS ARE IN LINE WITH THE CAVITY CENTERLINE.

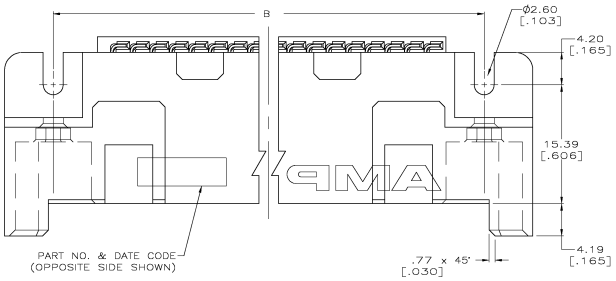


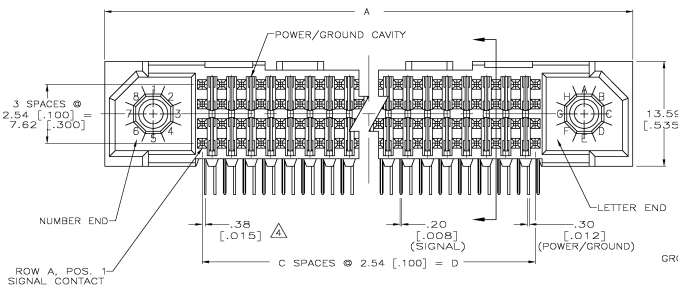


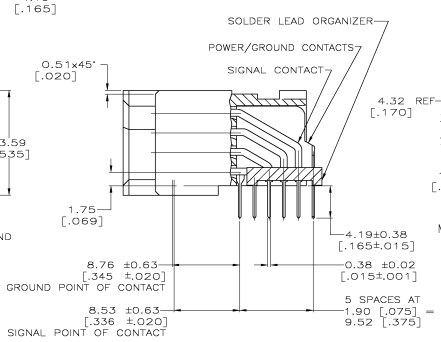


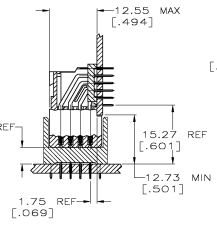


REFERENCE
MATED CROSS SECTION
SCALE 2:1

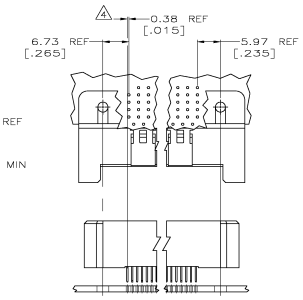


REFERENCE
MATED CONNECTOR THRU HOLE OFFSET
SCALE 2:1

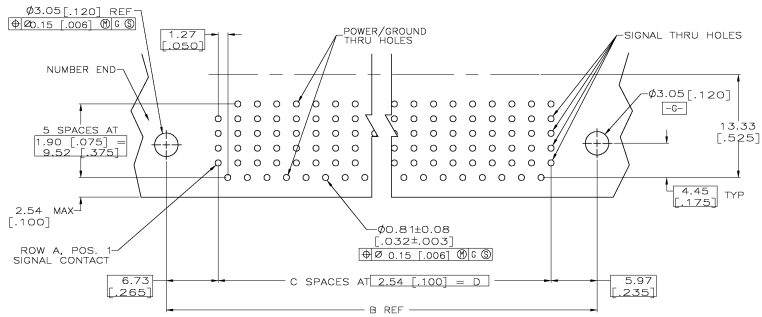


RECOMMENDED CIRCUIT PATTERN
PER ANSI/IPC-D-300 TYPE II, CLASS C
(COMPONENT SIDE)

| | | | | | | |
|---|---|---|---|---|---|---|
| OBSOLETE | – | – | – | – | – | 1-646243-2 |
| | – | – | – | – | – | 1-646243-1 |
| OBSOLETE | – | – | – | – | – | 1-646243-0 |
| OBSOLETE | – | – | – | – | – | 646243-9 |
| | 99.06 [3.900] | 39 | 111.76 [4.400] | 124.36 [4.896] | 160 | 646243-8 |
| | 175.26 [6.900] | 69 | 187.96 [7.400] | 200.56 [7.896] | 280 | 646243-7 |
| | 149.86 [5.900] | 59 | 162.56 [6.400] | 175.16 [6.896] | 240 | 646243-6 |
| | 137.16 [5.400] | 54 | 149.86 [5.900] | 162.46 [6.396] | 220 | 646243-5 |
| | 111.76 [4.400] | 44 | 124.46 [4.900] | 137.06 [5.396] | 180 | 646243-4 |
| | 86.36 [3.400] | 34 | 99.06 [3.900] | 111.66 [4.396] | 140 | 646243-3 |
| | 60.96 [2.400] | 24 | 73.66 [2.900] | 86.26 [3.396] | 100 | 646243-2 |
| OBSOLETE | 35.56 [1.400] | 14 | 48.26 [1.900] | 60.86 [2.396] | 60 | 646243-1 |
| | D | C | B | A | NUMBER OF SIGNAL POSITIONS | PART NUMBER |

METRIC

THIS DRAWING IS A CONTROLLED DOCUMENT.

DWN D.R.BENDER 10/27/92
CHK S.HEADER 10/29/92
APVD —

Tyco Electronics Corporation
Harrisburg, PA 17105-3608

DIMENSIONS: INCHES
TOLERANCES UNLESS OTHERWISE SPECIFIED: 0 PLC ± –; 1 PLC ± 0.5 [.02]; 2 PLC ± 0.25 [.010]; 3 PLC ± –; ANGLES ± –
MATERIAL 1 2 FINISH 3

PRODUCT SPEC 108-1244
APPLICATION SPEC 114-1065
WEIGHT (TBD)

NAME: Z-PACK Stripline 100 RECEPTACLE ASSEMBLY, INTEGRAL, 4.19 [.165] SOLDER LEAD LENGTH

SIZE A1 | CAGE CODE 00779 | DRAWING NO C-646243 | RESTRICTED TO —

CUSTOMER DRAWING | SCALE 4:1 | SHEET 1 OF 1 | REV F

AMP 4605 REV 31MAR0000

Downloaded from Elcodis.com electronic components distributor