THIS DRAWING IS UNPUBLISHED. RELEASED FOR PUBLICATION -.-- -
© COPYRIGHT — BY TYCO ELECTRONICS CORPORATION. ALL RIGHTS RESERVED.

UOC	DIST
AD	00

REVISIONS

P	LTR	DESCRIPTION	DATE	DRN	APVD
	H	EC 0G3C 0209 05	27APR05	BSV	JLG
	H1	REVISED PER ECO-09-021826	6JAN10	KK	AEG

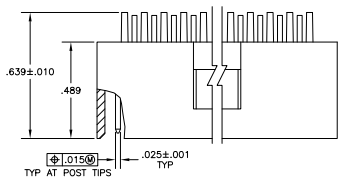

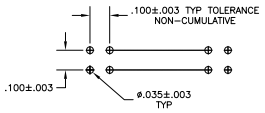

RECOMMENDED HOLE LAYOUT

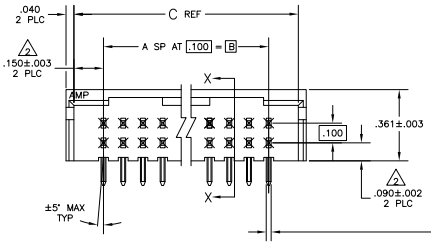

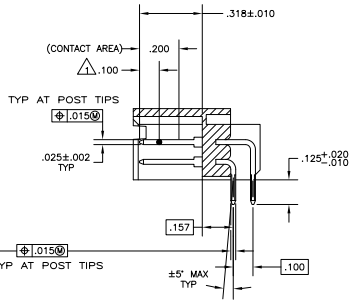

SECTION X—X

6 OBSOLETE	3	3.200	2.900	29	60	7-103165-6
6 OBSOLETE	3	2.700	2.400	24	50	7-103165-1
	3	2.200	1.900	19	40	6-103165-6
6 OBSOLETE	3	1.900	1.600	16	34	6-103165-3
6 OBSOLETE	3	1.700	1.400	14	30	6-103165-1
	3	1.500	1.200	12	26	5-103165-9
	3	1.400	1.100	11	24	5-103165-8
	3	1.200	.900	9	20	5-103165-6
6 OBSOLETE	3	1.100	.800	8	18	5-103165-5
	3	1.000	.700	7	16	5-103165-4
	3	.900	.600	6	14	5-103165-3
6 OBSOLETE	3	.800	.500	5	12	5-103165-2
6 OBSOLETE	3	.700	.400	4	10	5-103165-1
6 OBSOLETE	3	3.800	3.500	35	72	3-103165-2
6 OBSOLETE	3	3.700	3.400	34	70	3-103165-1
6 OBSOLETE	3	3.600	3.300	33	68	3-103165-0
6 OBSOLETE	3	3.500	3.200	32	66	2-103165-9
6 OBSOLETE	3	3.400	3.100	31	64	2-103165-8
6 OBSOLETE	3	3.300	3.000	30	62	2-103165-7
6 OBSOLETE	3	3.200	2.900	29	60	2-103165-6
6 OBSOLETE	3	3.100	2.800	28	58	2-103165-5
6 OBSOLETE	3	3.000	2.700	27	56	2-103165-4
6 OBSOLETE	3	2.900	2.600	26	54	2-103165-3
6 OBSOLETE	3	2.800	2.500	25	52	2-103165-2
	3	2.700	2.400	24	50	2-103165-1
6 OBSOLETE	3	2.600	2.300	23	48	2-103165-0
6 OBSOLETE	3	2.500	2.200	22	46	1-103165-9
6 OBSOLETE	3	2.400	2.100	21	44	1-103165-8
6 OBSOLETE	3	2.300	2.000	20	42	1-103165-7
	3	2.200	1.900	19	40	1-103165-6
6 OBSOLETE	3	2.100	1.800	18	38	1-103165-5
6 OBSOLETE	3	2.000	1.700	17	36	1-103165-4
6 OBSOLETE	3	1.900	1.600	16	34	1-103165-3
6 OBSOLETE	3	1.800	1.500	15	32	1-103165-2
	3	1.700	1.400	14	30	1-103165-1
6 OBSOLETE	3	1.600	1.300	13	28	1-103165-0
	3	1.500	1.200	12	26	103165-9
	3	1.400	1.100	11	24	103165-8
6 OBSOLETE	3	1.300	1.000	10	22	103165-7
	3	1.200	.900	9	20	103165-6
6 OBSOLETE	3	1.100	.800	8	18	103165-5
	3	1.000	.700	7	16	103165-4
	3	.900	.600	6	14	103165-3
6 OBSOLETE	3	.800	.500	5	12	103165-2
	3	.700	.400	4	10	103165-1
	PLATING	C	B	A	NO OF POSN	PART NUMBER

1. POINT OF MEASUREMENT FOR PLATING THICKNESS.
2. THE NOTED DIMENSION APPLIES AT THE INTERSECTION OF THE POST AND HOUSING
3. OBSOLETE PART NUMBERS
4. POSTS: .000030 GOLD IN CONTACT AREA, .000100-.000200 MATTE TIN-LEAD ON SOLDER TAIL, ALL OVER .000050 NICKEL
5. POSTS: .000030 GOLD IN CONTACT AREA, .000100-.000200 MATTE TIN ON SOLDER TAIL, ALL OVER .000050 NICKEL
6. OBSOLETE PARTS: OBSOLETE CIS STREAMLINING PER D.RENAUD/D.SINISI

THIS DRAWING IS A CONTROLLED DOCUMENT.

DIMENSIONS: INCHES

TOLERANCE UNLESS OTHERWISE SPECIFIED: 0 PLC ± – ; 1 PLC ± – ; 2 PLC ± – ; 3 PLC ± .005 ; 4 PLC ± – ; ANGLES ± –

MATERIAL: COPPER ALLOY, TIN-LEAD PLATED OVER NICKEL; POLYPHENYLENE SULFIDE

FINISH: SEE TABLE

DRN	H. MOLL	16NOV87
CHK	R. FIEDT	16NOV87
APVD	R. FIEDT	16NOV87
PRODUCT SPEC	—	
APPLICATION SPEC	—	
WEIGHT	—	

Tyco Electronics Corporation
Harrisburg, Pa 17105-3608

NAME: HEADER ASSY, MOD II, DBL ROW, .100X.100 C/L, RIGHT ANGLE, (3) SIDED SHROUD

SIZE	CAGE CODE	DRAWING NO	RESTRICTED TO
A1	00779	C-103165	—

CUSTOMER DRAWING | SCALE 4:1 | SHEET 1 OF 1 | REV H1

AMP 4805 REV 31MAR2000

Downloaded from Elcodis.com electronic components distributor