FEATURES

1. This specification shall be applied to photocoupler. Model No. LTV-817 as an option.
2. Applicable Models (Business dealing name)
   * Dual-in-line package :
     LTV817-V : 1-channel type / LTV827-V : 2-channel type /
     LTV847-V : 4-channel type
   * Wide lead spacing package :
     LTV817M-V : 1-channel type / LTV827M-V : 2-channel type /
     LTV847M-V : 4-channel type
   * Surface mounting package :
     LTV817S-V : 1-channel type / LTV827S-V : 2-channel type /
     LTV847S-V : 4-channel type
   * Tape and reel packaging :
     LTV817STA1-V, LTV827STA1-V
3. The relevant models are the models Approved by VDE according to DIN VDE 0884:1992-06

   Approved Model No.: LTV-817 / LTV-827 / LTV-847 / LTV-817M / LTV-827M / LTV-847M / LTV-817S / LTV-827S / LTV-847S

   VDE approved No.: 094722

   (According to the specification DIN VDE 0884:1992-06)

   * Operating isolation voltage V_{IORM} : 850V (Peak)
   * Transient voltage V_{TR} : 6000V (Peak)
   * Pollution : 2 (According to VDE 0110-1 : 1997-04)
   * Clearances distance (Between input and output) : 7.0mm (MIN.)
   * Creepage distance (Between input and output) : 7.0mm (MIN.)
   * Isolation thickness between input and output : 0.4mm (MIN.)
   * Safety limit values Current (Isi) : 400mA (Diode side)
     Power (Psi) : 700mW (Phototransistor side)
     Temperature(Tsi) : 175°C

     In order to keep safety electric isolation of photocoupler, please set the protective circuit to keep within safety limit values when the actual application equipment troubled.

   * Indication of VDE 0884 approval prints "4" for 4-pin and "DE 0884" for 8 & 16 pin on sleeve package.

Downloaded from Elcodis.com electronic components distributor

OUTLINE DIMENSIONS

LTV817-V :

TYPE I (INK MARK)

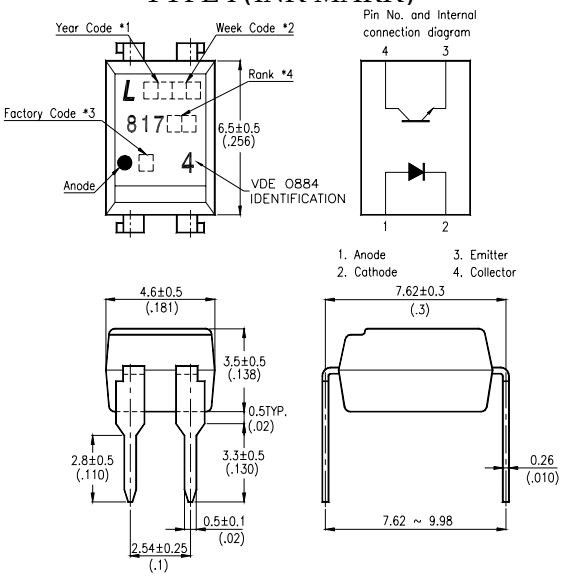

TYPE II (LASER MARK)

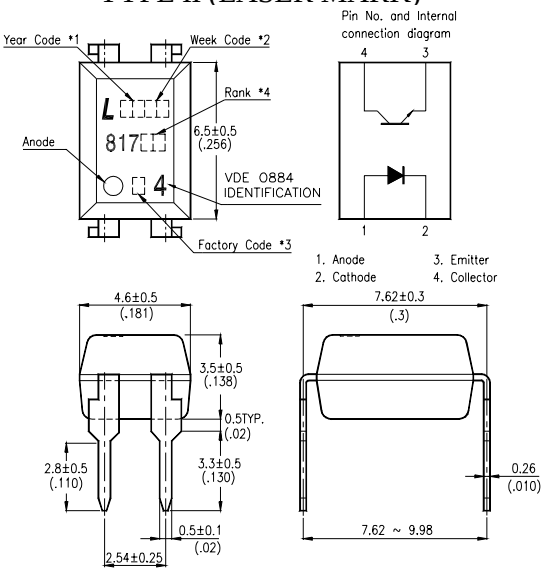

LTV827-V :

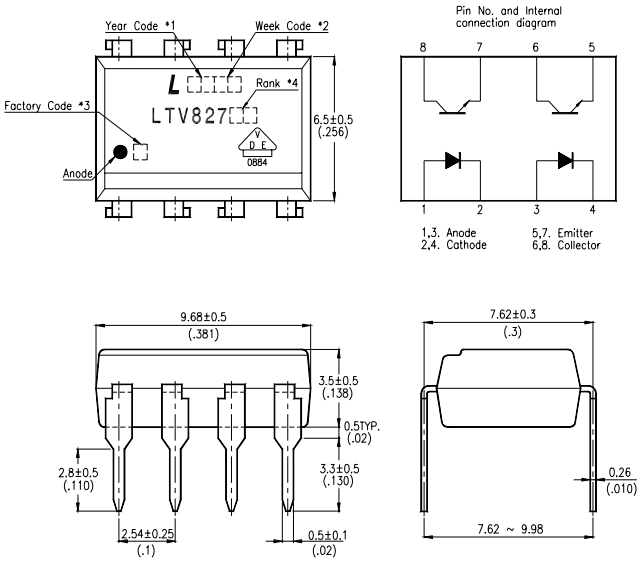

*1. Year date code.
*2. 2-digit work week.
*3. Factory identification mark shall be marked (Z : Taiwan, Y : Thailand, X : China).
*4. Rank shall be or shall not be marked.

Downloaded from Elcodis.com electronic components distributor

OUTLINE DIMENSIONS

LTV847-V :

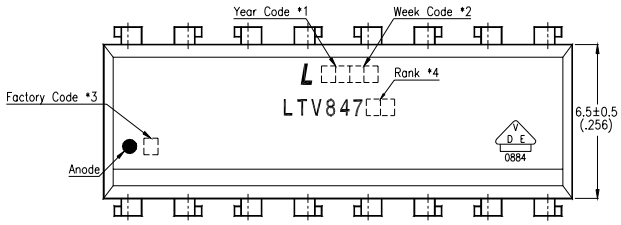

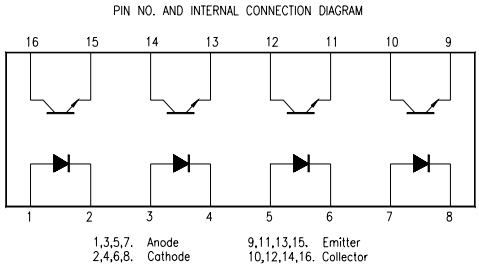

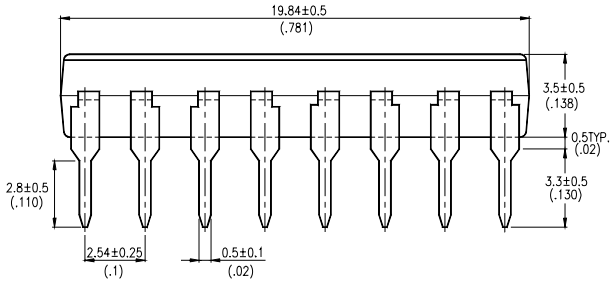

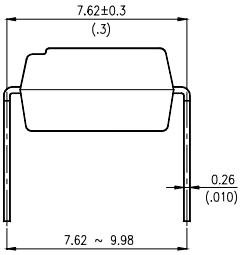

LTV817M-V :

TYPE I (INK MARK)

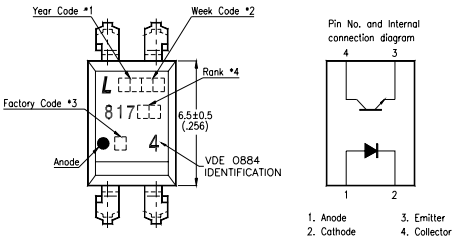

TYPE II (LASER MARK)

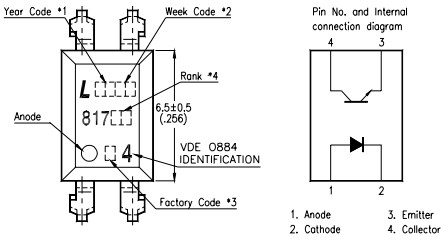

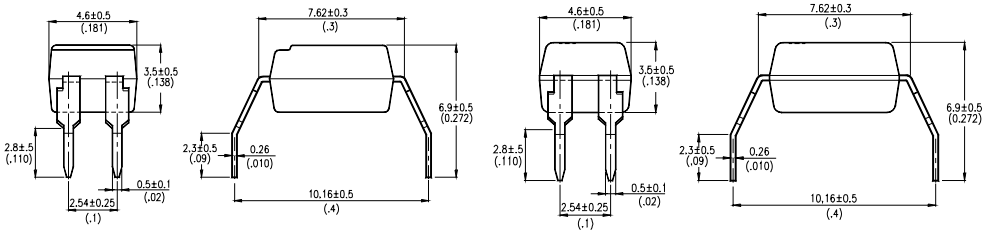

*1. Year date code.
*2. 2-digit work week.
*3. Factory identification mark shall be marked (Z : Taiwan, Y : Thailand, X : China).
*4. Rank shall be or shall not be marked.

Downloaded from Elcodis.com electronic components distributor

OUTLINE DIMENSIONS

LTV827M-V :

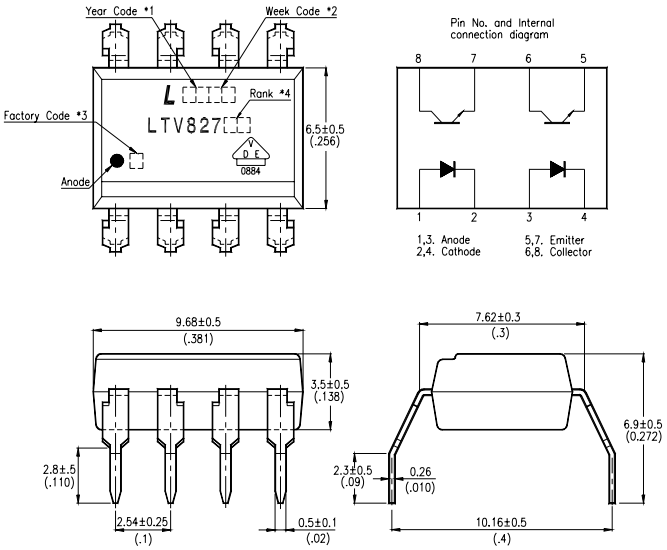

LTV847M-V :

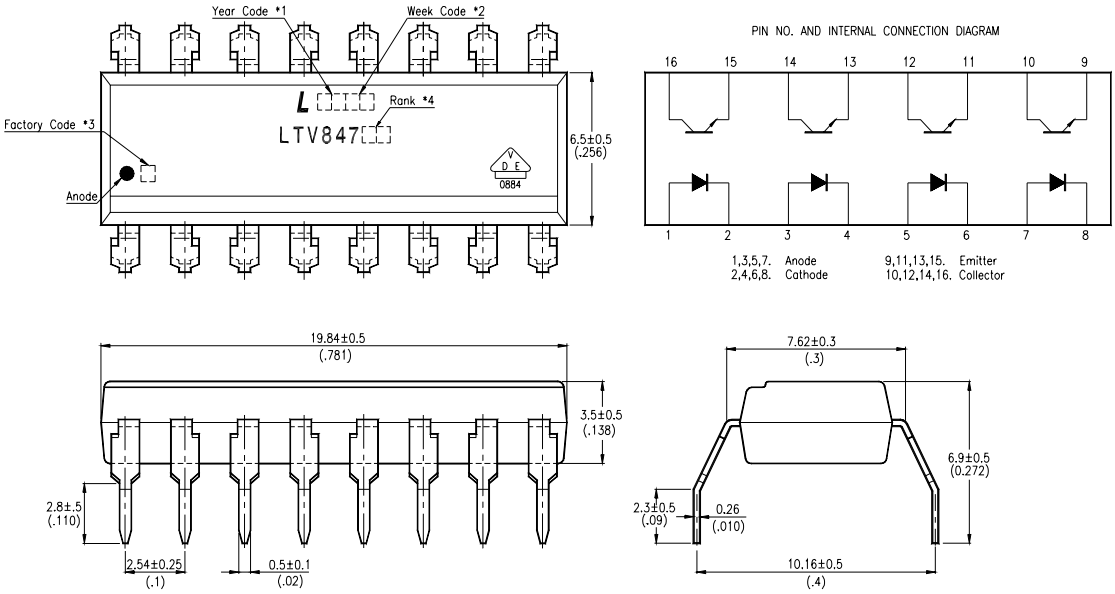

*1. Year date code.
*2. 2-digit work week.
*3. Factory identification mark shall be marked (Z : Taiwan, Y : Thailand, X : China).
*4. Rank shall be or shall not be marked.

Downloaded from Elcodis.com electronic components distributor

OUTLINE DIMENSIONS

LTV817S-V :

TYPE I (INK MARK)

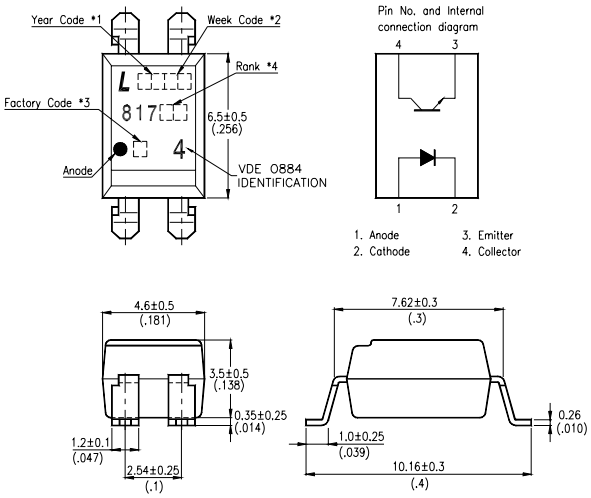

TYPE II (LASER MARK)

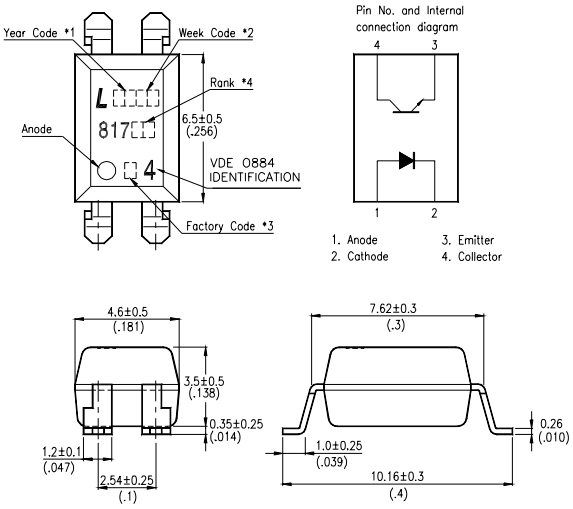

LTV827S-V :

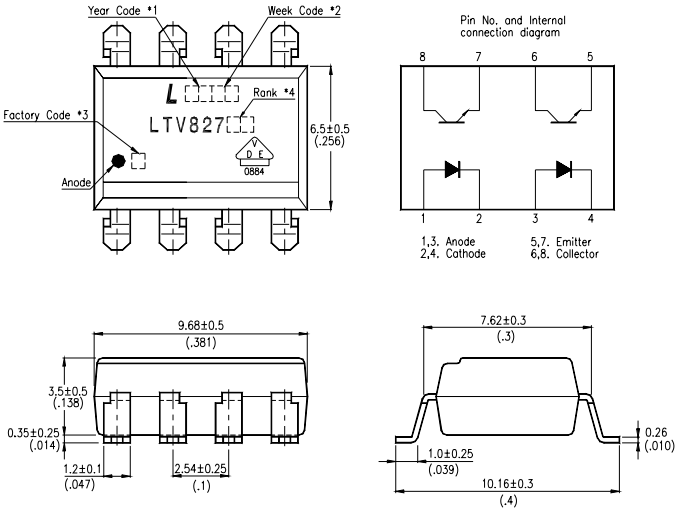

*1. Year date code.
*2. 2-digit work week.
*3. Factory identification mark shall be marked (Z : Taiwan, Y : Thailand, X : China).
*4. Rank shall be or shall not be marked.

Downloaded from Elcodis.com electronic components distributor

OUTLINE DIMENSIONS

LTV847S-V :

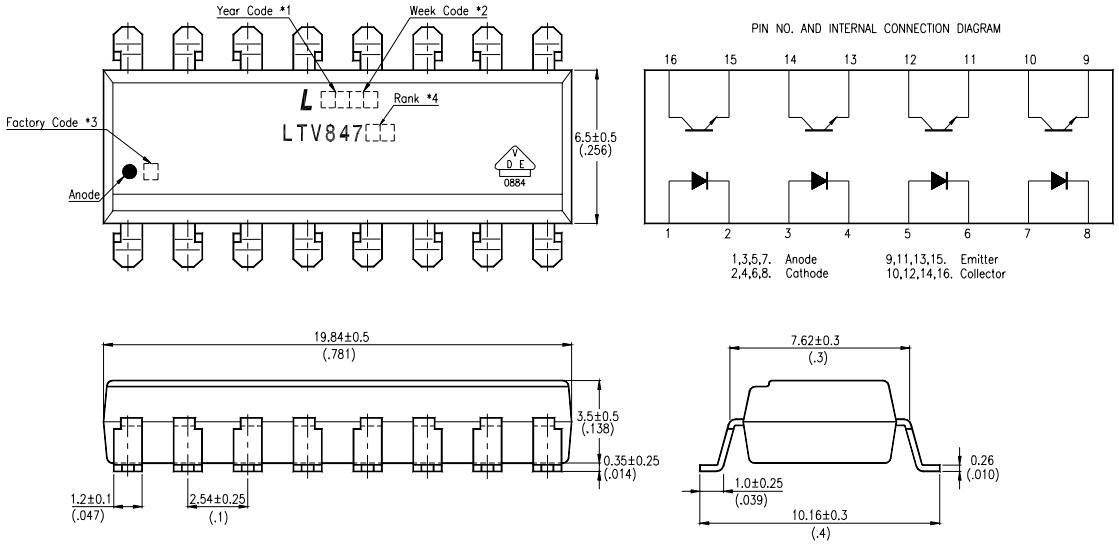

*1. Year date code.
*2. 2-digit work week.
*3. Factory identification mark shall be marked (Z : Taiwan, Y : Thailand, X : China).
*4. Rank shall be or shall not be marked.

Downloaded from Elcodis.com electronic components distributor

TAPING DIMENSIONS

LTV817STA1-V :

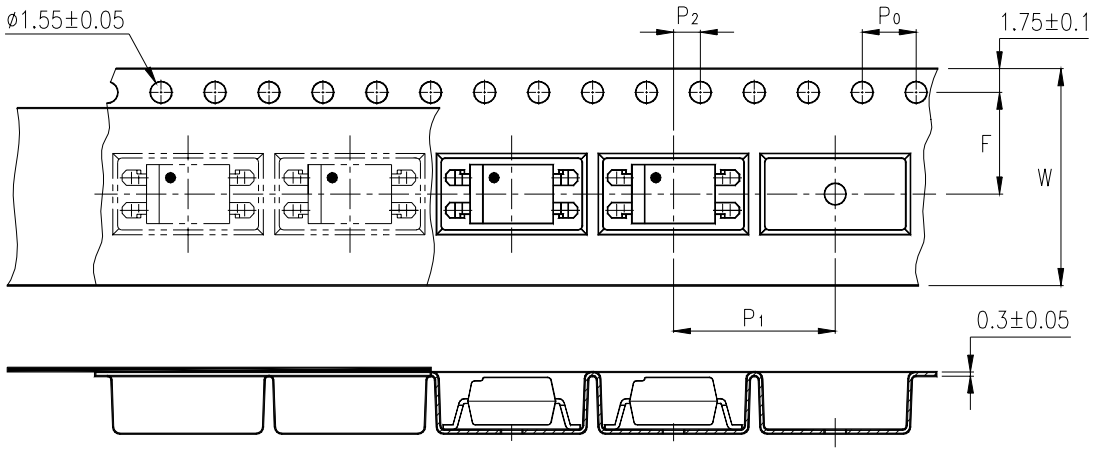

LTV827STA1-V :

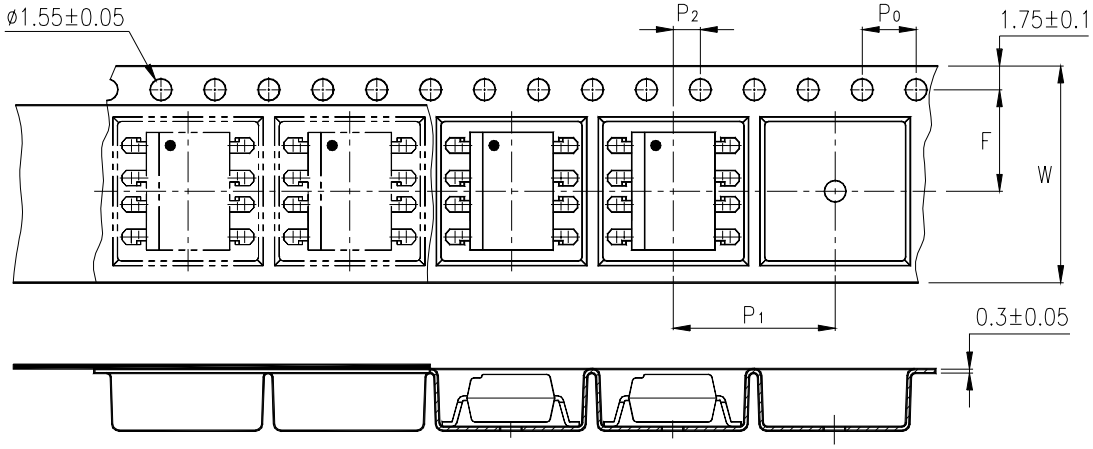

Description	Symbol	Dimensions in mm (inches)
Tape wide	W	16 ± 0.3 (.63)
Pitch of sprocket holes	P_0	4 ± 0.1 (.15)
Distance of compartment	F P_2	7.5 ± 0.1 (.295) 2 ± 0.1 (.079)
Distance of compartment to compartment	P_1	12 ± 0.1 (.472)

Downloaded from Elcodis.com electronic components distributor

ABSOLUTE MAXIMUM RATING

(Ta = 25°C)

PARAMETER		SYMBOL	RATING	UNIT
INPUT	Forward Current	I_F	50	mA
	Reverse Voltage	V_R	6	V
	Power Dissipation	P	70	mW
OUTPUT	Collector - Emitter Voltage	V_{CEO}	35	V
	Emitter - Collector Voltage	V_{ECO}	6	V
	Collector Current	I_C	50	mA
	Collector Power Dissipation	P_C	150	mW
Total Power Dissipation		P_{tot}	200	mW
*1 Isolation Voltage		V_{iso}	5,000	Vrms
Operating Temperature		T_{opr}	-30 ~ +100	°C
Storage Temperature		T_{stg}	-55 ~ +125	°C
*2 Soldering Temperature		T_{sol}	260	°C

*1. AC For 1 Minute, R.H. = 40 ~ 60%

Isolation voltage shall be measured using the following method.

(1) Short between anode and cathode on the primary side and between collector and emitter on the secondary side.

(2) The isolation voltage tester with zero-cross circuit shall be used.

(3) The waveform of applied voltage shall be a sine wave.

*2. For 10 Seconds

Downloaded from Elcodis.com electronic components distributor

ELECTRICAL - OPTICAL CHARACTERISTICS

(Ta = 25°C)

PARAMETER		SYMBOL	MIN.	TYP.	MAX.	UNIT	CONDITIONS
INPUT	Forward Voltage	V_F	—	1.2	1.4	V	I_F=20mA
	Reverse Current	I_R	—	—	10	μA	V_R=4V
	Terminal Capacitance	C_t	—	30	250	pF	V=0, f=1KHz
OUTPUT	Collector Dark Current	I_{CEO}	—	—	100	nA	V_{CE}=20V, I_F=0
	Collector-Emitter Breakdown Voltage	BV_{CEO}	35	—	—	V	I_C=0.1mA I_F=0
	Emitter-Collector Breakdown Voltage	BV_{ECO}	6	—	—	V	I_E=10μA I_F=0
TRANSFER CHARACTERISTICS	Collector Current	I_C	2.5	—	30	mA	I_F=5mA V_{CE}=5V
	* Current Transfer Ratio	CTR	50	—	600	%	
	Collector-Emitter Saturation Voltage	VCE(sat)	—	0.1	0.2	V	I_F=20mA I_C=1mA
	Isolation Resistance	Riso	5×10^{10}	1×10^{11}	—	Ω	DC500V 40 ~ 60% R.H.
	Floating Capacitance	C_f	—	0.6	1	pF	V=0, f=1MHz
	Cut-Off Frequency	fc	—	80	—	kHz	V_{CE}=5V, I_C=2mA R_L=100Ω, -3dB
	Response Time (Rise)	t_r	—	4	18	μs	V_{CE}=2V, I_C=2mA R_L=100Ω
	Response Time (Fall)	t_f	—	3	18	μs	

$$* \ CTR = \frac{I_C}{I_F} \times 100\%$$

Downloaded from Elcodis.com electronic components distributor

RANK TABLE OF CURRENT TRANSFER RATIO CTR

MODEL NO.	RANK MARK	CTR (%)
LTV817-V	L	50 ~ 100
	A	80 ~ 160
	B	130 ~ 260
	C	200 ~ 400
	D	300 ~ 600
	L or A or B or C or D or No mark	50 ~ 600
LTV827-V LTV847-V	B	130 ~ 260
	B or C or BC	130 ~ 400
	C	200 ~ 400
	C or D or CD	200 ~ 600
	B、BC、C、CD or No mark	50 ~ 600

CONDITIONS	I_F = 5 mA V_{CE} = 5 V Ta = 25 °C

Downloaded from Elcodis.com electronic components distributor

ISOLATION SPECIFICATION ACCORDING TO VDE 0884

Parameter		Symbol	Conditions	Rating	Unit	Remark
Class of environmental test		-	DIN IEC68	30/100/21	-	
Pollution		-	DIN VDE0110	2	-	
Maximum Operating Isolation Voltage		V_{IORM}	-	850	V_{PEAK}	Refer to the Diagram 1, 2
Partial Discharge Test Voltage (Between Input and Output)	Diagram 1	Vpr	tp=60s, qc<5pC	1275	V_{PEAK}	
	Diagram 2		tp=1s, qc<5pC	1594	V_{PEAK}	
Maximum Over-voltage		$V_{INITIAL}$	t_{INI} = 10s	6000	V_{PEAK}	
Safety Maximum Ratings						Refer to the Figure 1, 3
1) Case Temperature		Tsi	I_F = 0, Pc = 0	175	^oC	
2) Input Current		Isi	Pc=0	400	mA	
3) Electric Power (Output or Total Power Issipation)		Psi	-	700	mW	
Isolation Resistance (Test Voltage Between Input and Output : DC500V)		R_{ISO}	Ta=Tsi	MIN.10^9	Ω	
			Ta=Topr(MAX.)	MIN.10^{11}		
			Ta=25 ^oC	MIN.10^{12}		

Precautions in performing isolation test

* Partial discharge test methods shall be the ones according to the specifications of VDE 0884:1992-06

* Please don't carry out isolation test (Viso) over $V_{INITIAL}$,This product deteriorates isolation characteristics by partial discharge due to applying high voltage (ex. $V_{INITIAL}$). And there is possibility that this product occurs partial discharge in operating isolation voltage (V_{IORM})

Downloaded from Elcodis.com electronic components distributor

PARTIAL DISCHARGE TEST METHOD

Method (A) for type testing and random testing.

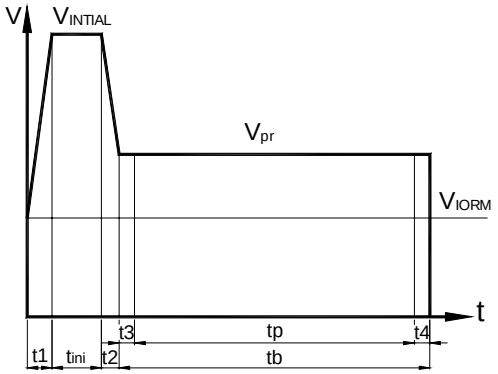

t1, t2	= 1 to 10s
t3, t4	= 1s
tp (Partial Discharge Measuring Time)	= 60s
tb	= 62s
tini	= 10s

Method (B) for routine testing.

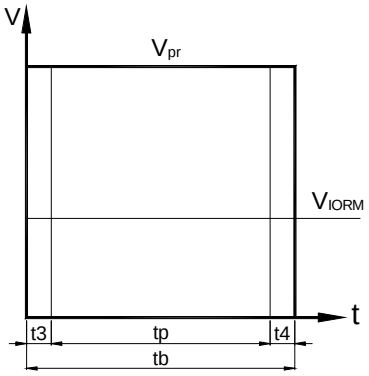

t3, t4	= 0.1s
tp (Partial Discharge Measuring Time)	= 1s
tb	= 1.2s

The partial discharge level shall not exceed 5 pC during the partial discharge measuring time interval t_p under the test conditions shown above.

Downloaded from Elcodis.com electronic components distributor

CHARACTERISTICS CURVES

Fig.1 Forword Current vs. Ambient Temperatute

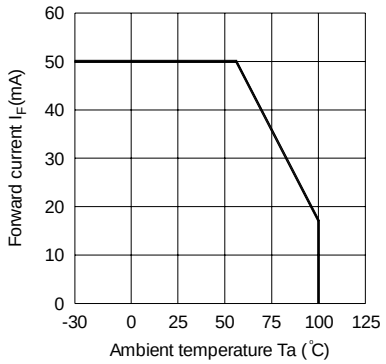

Fig.2 Collector Power Dissiption vs. Ambient Temperature

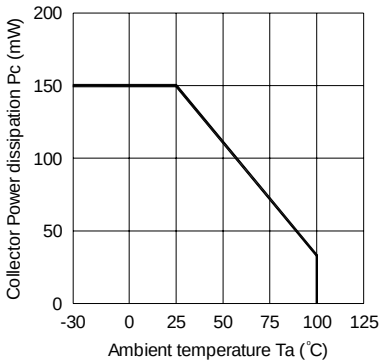

Fig.3 Collector-emitter Saturation Voltage vs. Forward Current

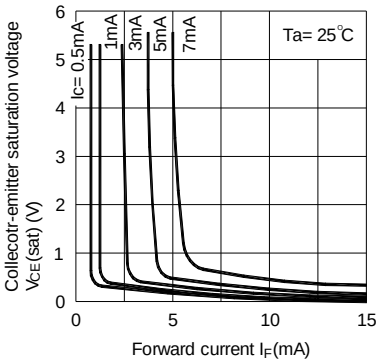

Fig.4 Forward Current vs. Forward Voltage

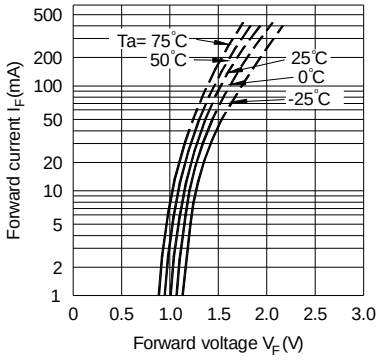

Fig.5 Current Transfer Ratio vs. Forward Current

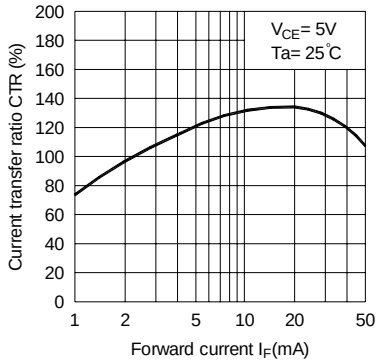

Fig.6 Collector Current vs. Collector-emitter Voltage

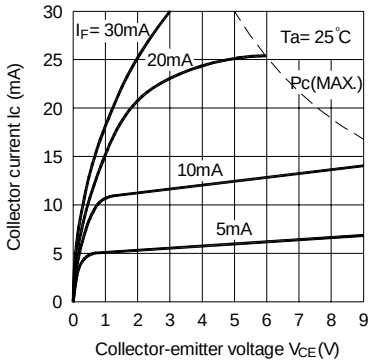

Downloaded from Elcodis.com electronic components distributor

CHARACTERISTICS CURVES

Fig.7 Relative Current Transfer Ratio vs. Ambient Temperature

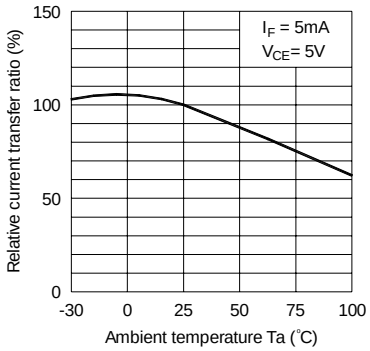

Fig.8 Collector-emitter Saturation Voltage vs. Ambient Temperature

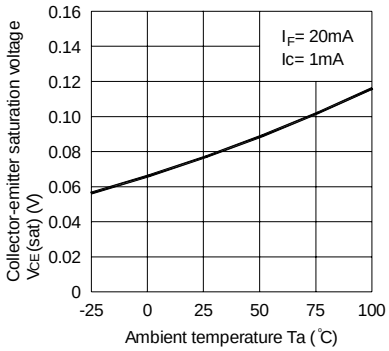

Fig.9 Collector Dark Current vs. Ambient Temperature

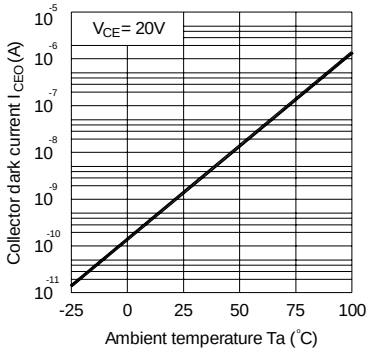

Fig.10 Response Time vs. Load Resistance

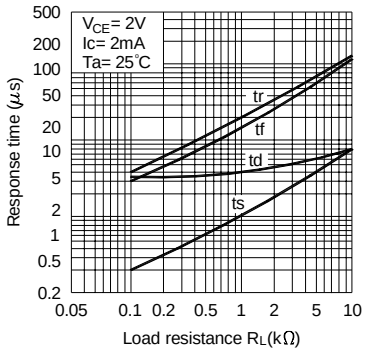

Fig.11 Frequency Response

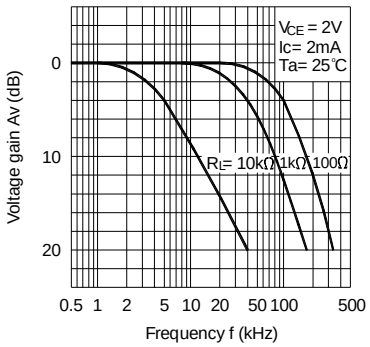

Test Circuit for Response Time

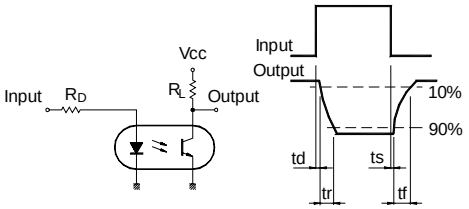

Test Circuit for Frequency Response

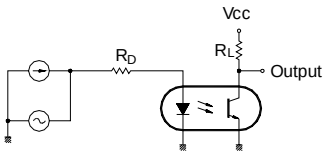

Downloaded from Elcodis.com electronic components distributor

RECOMMENDED FOOT PRINT PATTERNS (MOUNT PAD)

Unit : mm

4 PIN

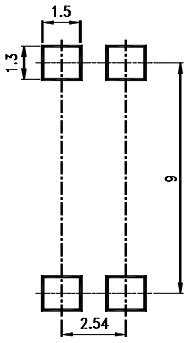

8 PIN

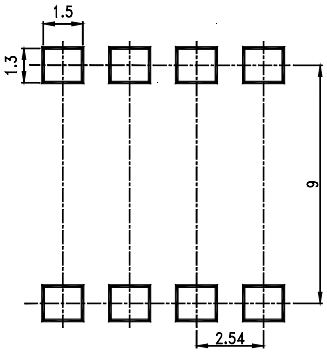

16 PIN

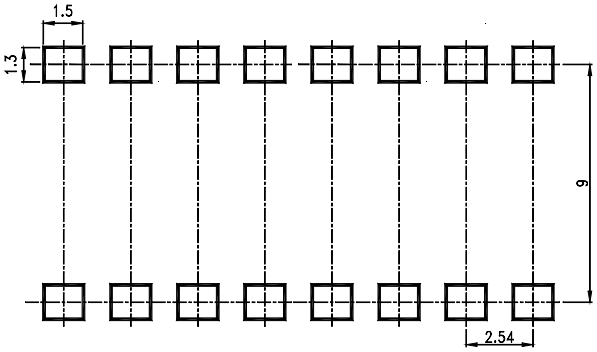

Downloaded from Elcodis.com electronic components distributor