THIS DRAWING IS UNPUBLISHED. RELEASED FOR PUBLICATION -.-.-
© COPYRIGHT - By - ALL RIGHTS RESERVED

LOC	DIST
DF	HO

REVISIONS

P	LTR	DESCRIPTION	DATE	DRN	APVD
	R	REVISED PER ECO-11-015055	03AU011	PY	DE

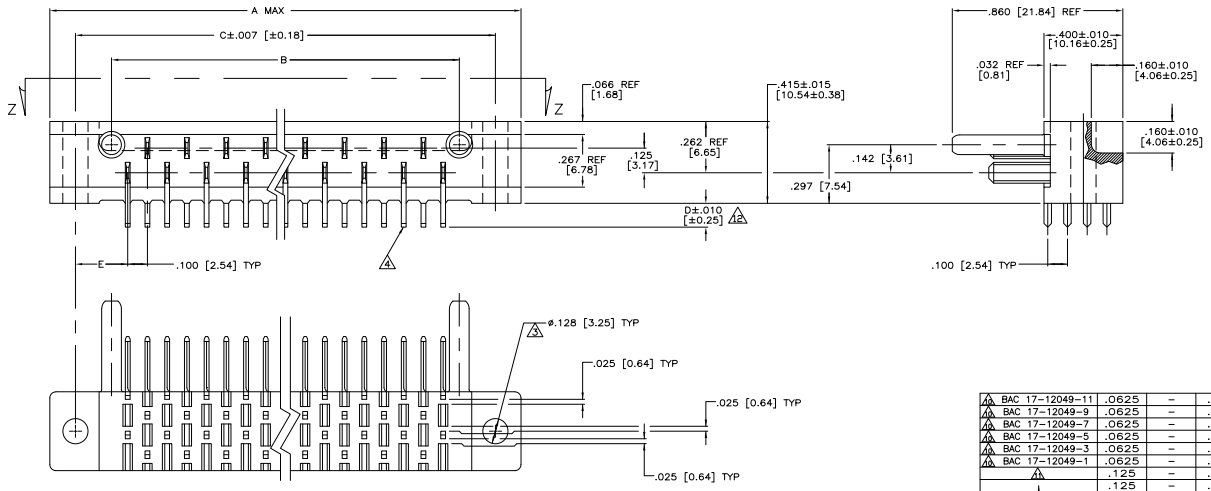

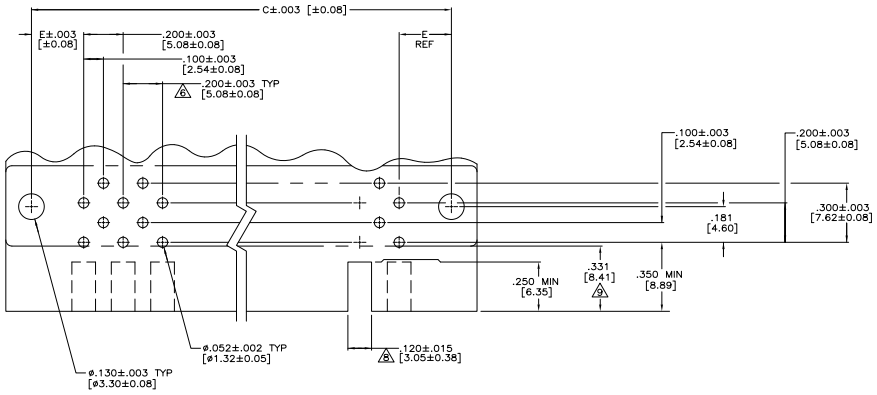

RECOMMENDED P.C. BOARD LAYOUT

MARKING	P.C. BD. THICKNESS	E	D 12	C	B	A	NO. OF CONT.	PART NUMBER
14 BAC 17-12049-11	.0625	–	.120	–	4.764	5.070	47	4-582843-5
14 BAC 17-12049-9	.0625	–	.120	–	4.164	4.470	41	4-582843-4
14 BAC 17-12049-7	.0625	–	.120	–	3.564	3.870	35	4-582843-3
14 BAC 17-12049-5	.0625	–	.120	–	2.964	3.270	29	4-582843-2
14 BAC 17-12049-3	.0625	–	.120	–	2.364	2.670	23	4-582843-1
14 BAC 17-12049-1	.0625	–	.120	–	1.764	2.070	17	4-582843-0
1	.125	–	.183	–	4.764	5.070	47	3-582843-6
	.125	–	.183	–	4.164	4.470	41	3-582843-5
	.125	–	.183	–	3.564	3.870	35	3-582843-4
	.125	–	.183	–	2.964	3.270	29	3-582843-3
	.125	–	.183	–	2.364	2.670	23	3-582843-2
	.125	–	.183	–	1.764	2.070	17	3-582843-1
	.125	.381	.183	5.363	4.764	5.623	47	3-582843-0
	.125	.265	.183	4.530	4.164	4.790	41	2-582843-9
	.125	.265	.183	3.930	3.564	4.190	35	2-582843-8
	.125	.265	.183	3.330	2.964	3.590	29	2-582843-7
	.125	.265	.183	2.730	2.364	2.990	23	2-582843-6
	.125	.265	.183	2.130	1.764	2.390	17	2-582843-5
	.0937	–	.152	–	4.764	5.070	47	2-582843-4
	.0937	–	.152	–	4.164	4.470	41	2-582843-3
	.0937	–	.152	–	3.564	3.870	35	2-582843-2
	.0937	–	.152	–	2.964	3.270	29	2-582843-1
	.0937	–	.152	–	2.364	2.670	23	2-582843-0
	.0937	–	.152	–	1.764	2.070	17	1-582843-9
	.0937	.381	.152	5.363	4.764	5.623	47	1-582843-8
	.0937	.265	.152	4.530	4.164	4.790	41	1-582843-7
	.0937	.265	.152	3.930	3.564	4.190	35	1-582843-6
	.0937	.265	.152	3.330	2.964	3.590	29	1-582843-5
	.0937	.265	.152	2.130	1.764	2.390	17	1-582843-4
	.0625	–	.120	–	4.764	5.070	47	1-582843-3
	.0625	–	.120	–	4.164	4.470	41	1-582843-2
	.0625	–	.120	–	3.564	3.870	35	1-582843-1
	.0625	–	.120	–	2.964	3.270	29	1-582843-0
	.0625	–	.120	–	2.364	2.670	23	582843-9
	.0625	–	.120	–	1.764	2.070	17	582843-8
	.0625	.381	.120	5.363	4.764	5.623	47	582843-7
	.0625	.265	.120	4.530	4.164	4.790	41	582843-6
	.0625	.265	.120	3.930	3.564	4.190	35	582843-5
	.0625	.265	.120	3.330	2.964	3.590	29	582843-4
	.0625	.265	.120	2.730	2.364	2.990	23	582843-3
	.0625	.265	.120	2.130	1.764	2.390	17	582843-2
1	.0937	.265	.152	2.730	2.364	2.990	23	582843-1

THIS DRAWING IS A CONTROLLED DOCUMENT.

DIMENSIONS: INCHES

TOLERANCE UNLESS OTHERWISE SPECIFIED:
6 PLC ± –
3 PLC ± –
2 PLC ± –
1 PLC ± .005 [0.13]
ANGLES ± –

MATERIAL 5 – 7
FINISH –

DR ALEXANDER 05-JAN-95
DS J WARNER 23-AUG-95
APV J WARNER 23-AUG-95
PRODUCT SPEC –
APPLICATION SPEC –
WEIGHT –

TE Connectivity

NAME ASSEMBLY, AMP BLADE TAB HOUSING

SIZE A1 CAGE CODE 00779 DRAWING NO C-582843 RESTRICTED TO –

CUSTOMER DRAWING SCALE 4:1 SHEET 1 OF 2 REV R

4AUG (3/11)

Downloaded from Elcodis.com electronic components distributor

THIS DRAWING IS UNPUBLISHED. RELEASED FOR PUBLICATION -.-.-
© COPYRIGHT - By - ALL RIGHTS RESERVED.

LOC	DIST
DF	HO

REVISIONS

P	LTR	DESCRIPTION	DATE	DRN	APVD
	-	SEE SHEET 1	-	-	-

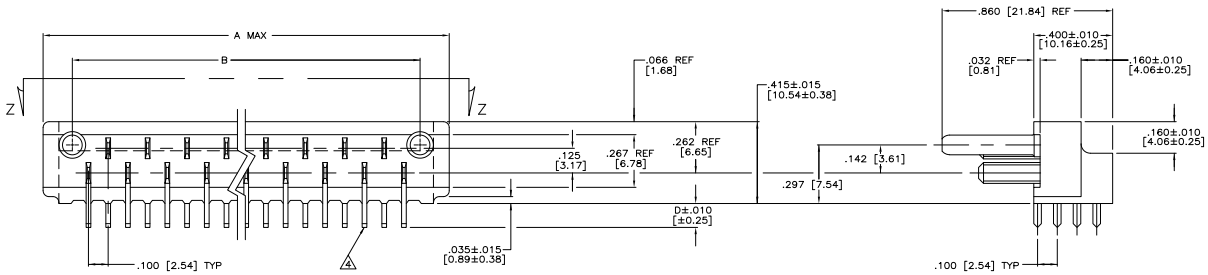

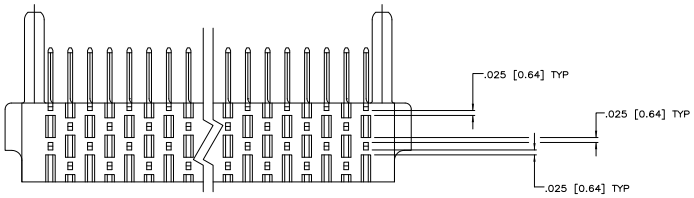

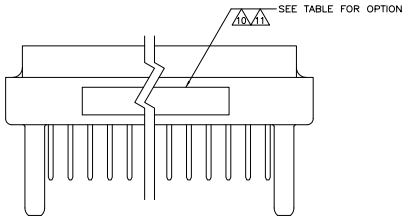

VIEW Z–Z

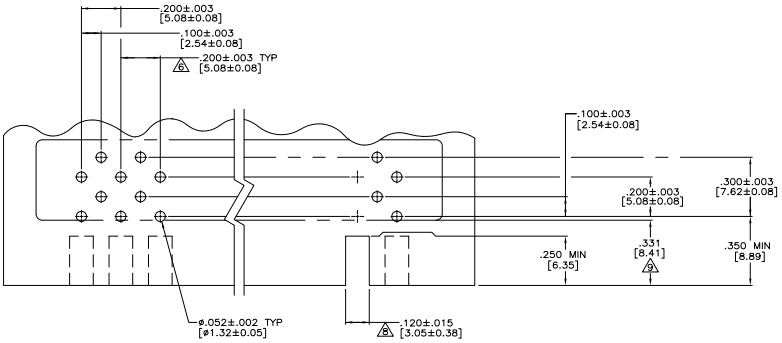

RECOMMENDED P.C. BOARD LAYOUT

1. TAB–HOUSING ASSEMBLY MATES WITH TE CONNECTIVITY P/N 3–582151 SERIES.
2. BLADE CENTER LINE TO BE MEASURED FROM THE CENTER LINE FORMED BY THE ALIGNMENT PINS & AS LONG AS THE BLADES FALL WITHIN TOLERANCES INDICATED, THE ALLOWABLE WARPAGE IS INDEPENDENT OF THE BLADES & BECOMES A MEASUREMENT OF THE OUTSIDE SURFACE OF THE TAB–HOUSING & DOES NOT EFFECT THE MATING OF THIS TAB–HOUSING WITH 582151.

3. MOUNTING HOLES.

4. POST TO BE SOLDER DIPPED.
CONN. MUST MEET REQUIREMENTS OF MIL–STD–202 METHOD 208.

5. CONTACT MATL.; GILDING METAL. GOLD OVER NICKEL.

6. TOLERANCE NON CUMULATIVE.

7. TAB–HOUSING MATL.; DIALLYL PHTHALATE, GLASS FILLED PER MIL–M–14, TYPE S.D.G.–F.
COLOR; GREEN.

8. CUT OUT FOR KEYING BOSS, LOCATED WHERE REQD. (OPTIONAL)

9. FROM EDGE OF P.C. BOARD TO FACE OF TAB–HOUSING.

10. TE CONNECTIVITY P/N NOT TO BE MARKED ON PART.
CAGE CODE #00779, DATE CODE, & CUSTOMER P/N TO BE MARKED ON PART, SEE TABLE.

11. TE CONNECTIVITY PART NUMBER, DATE CODE AND MILITARY PART NUMBER .062 HIGH, MARKED THIS AREA AND ALL EVEN NUMBERED CONTACTS MARKED THIS AREA.

12. "D" DIMENSION APPLIES TO CONTACT ONLY PRIOR TO SOLDER DIPPING.

THIS DRAWING IS A CONTROLLED DOCUMENT.

TITLE	T ALEXANDER	09-JAN-95
CHK	J WARNER	23-AUG-95
APVD	J WARNER	23-AUG-95
PRODUCT SPEC	—	
APPLICATION SPEC	—	
WEIGHT	—	

DIMENSIONS: INCHES

TOLERANCE UNLESS OTHERWISE SPECIFIED:
0 PLC ± –
1 PLC ± –
2 PLC ± –.–
3 PLC ± .005 [0.13]
4 PLC ± –
ANGLES ± –

MATERIAL –

FINISH –

TE Connectivity

NAME: ASSEMBLY, AMP BLADE TAB HOUSING –

SIZE	CAGE CODE	DRAWING NO	RESTRICTED TO
A1	00779	C-582843	—

CUSTOMER DRAWING | SCALE 4:1 | SHEET 2 OF 2 | REV R

4MOS (3/11)

Downloaded from Elcodis.com electronic components distributor