IS61LV256

32K x 8 LOW VOLTAGE CMOS STATIC RAM

FEATURES

- High-speed access times:
  -- 8, 10, 12, 15, 20 ns
- Automatic power-down when chip is deselected
- CMOS low power operation
  -- 345 mW (max.) operating
  -- 7 mW (max.) CMOS standby
- TTL compatible interface levels
- Single 3.3V power supply
- Fully static operation: no clock or refresh required
- Three-state outputs

DESCRIPTION

The *ICSI* IS61LV256 is a very high-speed, low power, 32,768-word by 8-bit static RAM. It is fabricated using *ICSI*'s high-performance CMOS technology. This highly reliable process coupled with innovative circuit design techniques, yields access times as fast as 8 ns maximum.

When $\overline{CE}$ is HIGH (deselected), the device assumes a standby mode at which the power dissipation is reduced to 50 μW (typical) with CMOS input levels.

Easy memory expansion is provided by using an active LOW Chip Enable ($\overline{CE}$). The active LOW Write Enable ($\overline{WE}$) controls both writing and reading of the memory.

The IS61LV256 is available in the JEDEC standard 28-pin, 300mil SOJ and the 8*13.4mm TSOP-1 package.

FUNCTIONAL BLOCK DIAGRAM

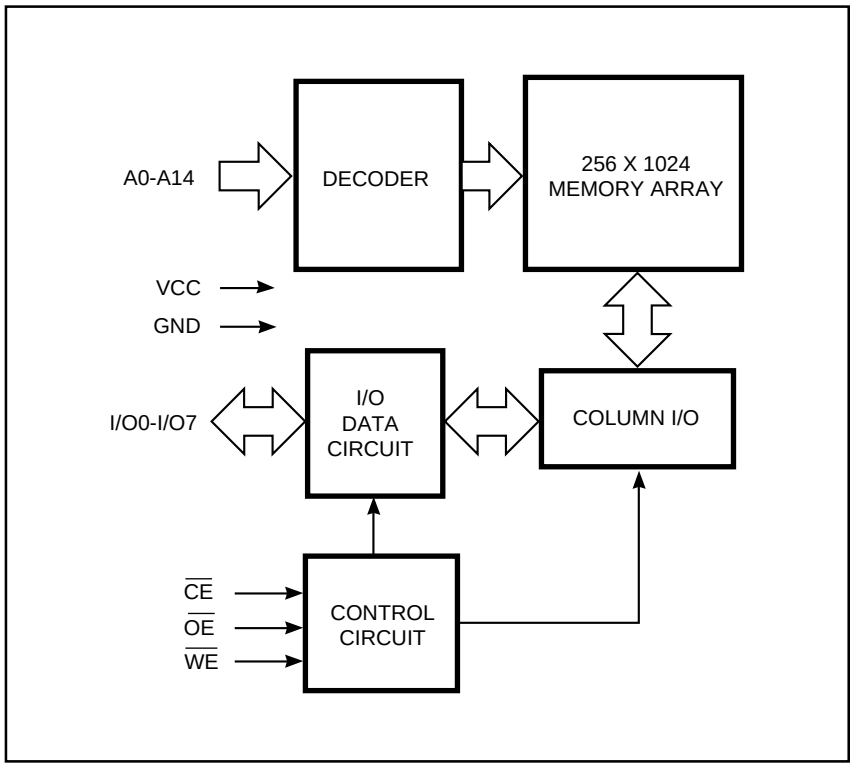

ICSI reserves the right to make changes to its products at any time without notice in order to improve design and supply the best possible product. We assume no responsibility for any errors which may appear in this publication. © Copyright 2000, Integrated Circuit Solution Inc.

Downloaded from Elcodis.com electronic components distributor

PIN CONFIGURATION
28-Pin SOJ

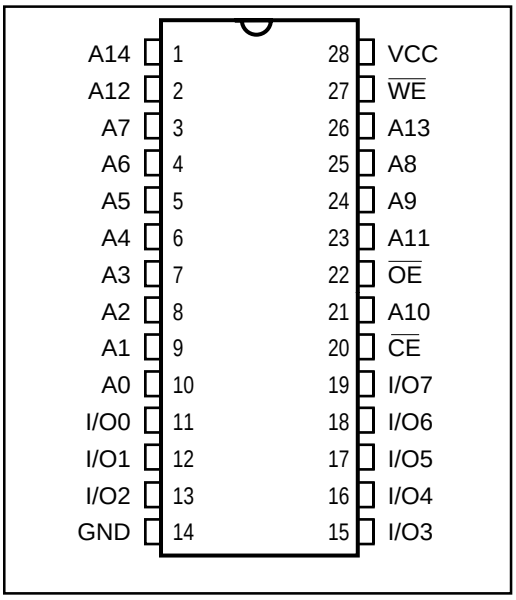

PIN CONFIGURATION
8x13.4mm TSOP-1

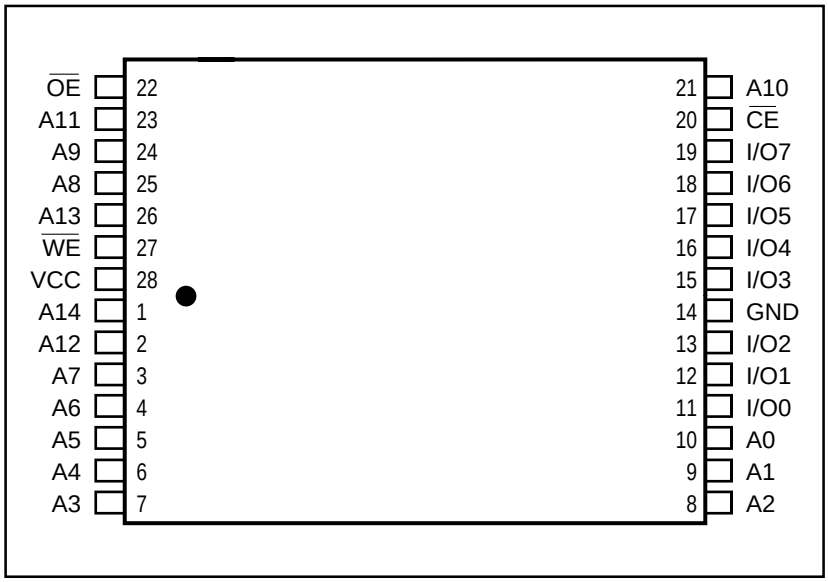

PIN DESCRIPTIONS

A0-A14	Address Inputs
$\overline{CE}$	Chip Enable Input
$\overline{OE}$	Output Enable Input
$\overline{WE}$	Write Enable Input
I/O0-I/O7	Input/Output
Vcc	Power
GND	Ground

TRUTH TABLE

Mode	$\overline{WE}$	$\overline{CE}$	$\overline{OE}$	I/O Operation	Vcc Current
Not Selected (Power-down)	X	H	X	High-Z	I_{SB1}, I_{SB2}
Output Disabled	H	L	H	High-Z	I_{CC}
Read	H	L	L	D_{OUT}	I_{CC}
Write	L	L	X	D_{IN}	I_{CC}

ABSOLUTE MAXIMUM RATINGS(1)

Symbol	Parameter		Value	Unit
V_{CC}	Power Supply Voltage Relative to GND		–0.5 to +4.6	V
V_{TERM}	Terminal Voltage with Respect to GND		–0.5 to +4.6	V
T_{BIAS}	Temperature Under Bias	Com.	–10 to +85	°C
		Ind.	–45 to +90	
T_{STG}	Storage Temperature		–65 to +150	°C
P_D	Power Dissipation		1	W
I_{OUT}	DC Output Current		±20	mA

Notes:
1. Stress greater than those listed under ABSOLUTE MAXIMUM RATINGS may cause permanent damage to the device. This is a stress rating only and functional operation of the device at these or any other conditions above those indicated in the operational sections of this specification is not implied. Exposure to absolute maximum rating conditions for extended periods may affect reliability.

Downloaded from Elcodis.com electronic components distributor

OPERATING RANGE

Range	Ambient Temperature	Speed	V_{CC}
Commercial	0°C to +70°C	8, 10, 12 15, 20	3.3V, +10%, –5% 3.3V ± 10%
Industrial	–40°C to +85°C	All	3.3V + 10%, –5%

DC ELECTRICAL CHARACTERISTICS (Over Operating Range)

Symbol	Parameter	Test Conditions		Min.	Max.	Unit
V_{OH}	Output HIGH Voltage	V_{CC} = Min., I_{OH} = –4.0 mA		2.4	—	V
V_{OL}	Output LOW Voltage	V_{CC} = Min., I_{OL} = 8.0 mA		—	0.4	V
V_{IH}	Input HIGH Voltage			2.2	V_{CC} + 0.3	V
V_{IL}	Input LOW Voltage[1]			–0.3	0.8	V
I_{LI}	Input Leakage	GND ≤ V_{IN} ≤ V_{CC}	Com. Ind.	–1 –5	1 5	μA
I_{LO}	Output Leakage	GND ≤ V_{OUT} ≤ V_{CC}, Outputs Disabled	Com. Ind.	–1 –5	1 5	μA

Notes:
1. V_{IL} (min.) = –0.3V (DC); V_{IL} (min.) = –2.0V (pulse width ≤ 2.0 ns).
   V_{IH} (max.) = V_{CC} + 0.5V (DC); V_{IH} (max.) = Vcc + 2.0V (pulse width ≤ 2.0 ns).
2. Not more than one output should be shorted at one time. Duration of the short circuit should not exceed 30 seconds.

POWER SUPPLY CHARACTERISTICS[1] (Over Operating Range)

Sym.	Parameter	Test Conditions		-8 ns Min. Max.	-10 ns Min. Max.	-12 ns Min. Max.	-15 ns Min. Max.	-20 ns Min. Max.	Unit
I_{CC}	Vcc Dynamic Operating Supply Current	V_{CC} = Max., $\overline{CE}$ = V_{IL} I_{OUT} = 0 mA, f = f_{MAX}	Com. Ind.	– 120 – 130	– 110 – 120	– 100 – 110	– 90 – 100	– 80 – 90	mA
I_{SB1}	TTL Standby Current (TTL Inputs)	V_{CC} = Max., V_{IN} = V_{IH} or V_{IL} $\overline{CE}$ ≥ V_{IH}, f = 0	Com. Ind.	– 25 – 30	– 25 – 30	– 25 – 30	– 25 – 30	– 25 – 30	mA
I_{SB2}	CMOS Standby Current (CMOS Inputs)	V_{CC} = Max., $\overline{CE}$ ≤ V_{CC} – 0.2V, V_{IN} > V_{CC} – 0.2V, or V_{IN} ≤ 0.2V, f = 0	Com. Ind.	– 2 – 5	– 2 – 5	– 2 – 5	– 2 – 5	– 2 – 5	mA

Notes:
1. At f = f_{MAX}, address and data inputs are cycling at the maximum frequency, f = 0 means no input lines change.

CAPACITANCE[1,2]

Symbol	Parameter	Conditions	Max.	Unit
C_{IN}	Input Capacitance	V_{IN} = 0V	6	pF
C_{OUT}	Output Capacitance	V_{OUT} = 0V	5	pF

Notes:
1. Tested initially and after any design or process changes that may affect these parameters.
2. Test conditions: T_A = 25°C, f = 1 MHz, Vcc = 3.3V.

Downloaded from Elcodis.com electronic components distributor

READ CYCLE SWITCHING CHARACTERISTICS[1] (Over Operating Range)

Symbol	Parameter	-8 ns Min.	-8 ns Max.	-10 ns Min.	-10 ns Max.	-12 ns Min.	-12 ns Max.	-15 ns Min.	-15 ns Max.	-20 ns Min.	-20 ns Max.	Unit
t_{RC}	Read Cycle Time	8	—	10	—	12	—	15	—	20	—	ns
t_{AA}	Address Access Time	—	8	—	10	—	12	—	15	—	20	ns
t_{OHA}	Output Hold Time	2	—	2	—	2	—	2	—	2	—	ns
t_{ACE}	$\overline{CE}$ Access Time	—	8	—	10	—	12	—	15	—	20	ns
t_{DOE}	$\overline{OE}$ Access Time	—	4	—	5	—	6	—	7	—	8	ns
t_{LZOE}[2]	$\overline{OE}$ to Low-Z Output	0	—	0	—	0	—	0	—	0	—	ns
t_{HZOE}[2]	$\overline{OE}$ to High-Z Output	—	4	—	5	—	5	—	6	—	6	ns
t_{LZCE}[2]	$\overline{CE}$ to Low-Z Output	3	—	3	—	3	—	3	—	3	—	ns
t_{HZCE}[2]	$\overline{CE}$ to High-Z Output	—	4	—	5	—	6	—	7	—	7	ns
t_{PU}[3]	$\overline{CE}$ to Power-Up	0	—	0	—	0	—	0	—	0	—	ns
t_{PD}[4]	$\overline{CE}$ to Power-Down	—	8	—	10	—	12	—	15	—	20	ns

Notes:
1. Test conditions assume signal transition times of 3 ns or less, timing reference levels of 1.5V, input pulse levels of 0 to 3.0V and output loading specified in Figure 1.
2. Tested with the load in Figure 2. Transition is measured ±200 mV from steady-state voltage. Not 100% tested.
3. Not 100% tested.

AC TEST CONDITIONS

Parameter	Unit
Input Pulse Level	0V to 3.0V
Input Rise and Fall Times	3 ns
Input and Output Timing and Reference Levels	1.5V
Output Load	See Figures 1 and 2

AC TEST LOADS

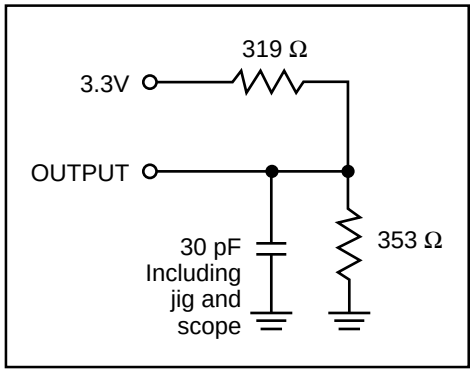

Figure 1.

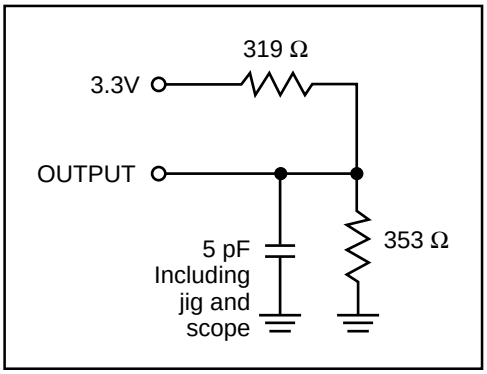

Figure 2.

Downloaded from Elcodis.com electronic components distributor

AC WAVEFORMS

READ CYCLE NO. 1(1,2)

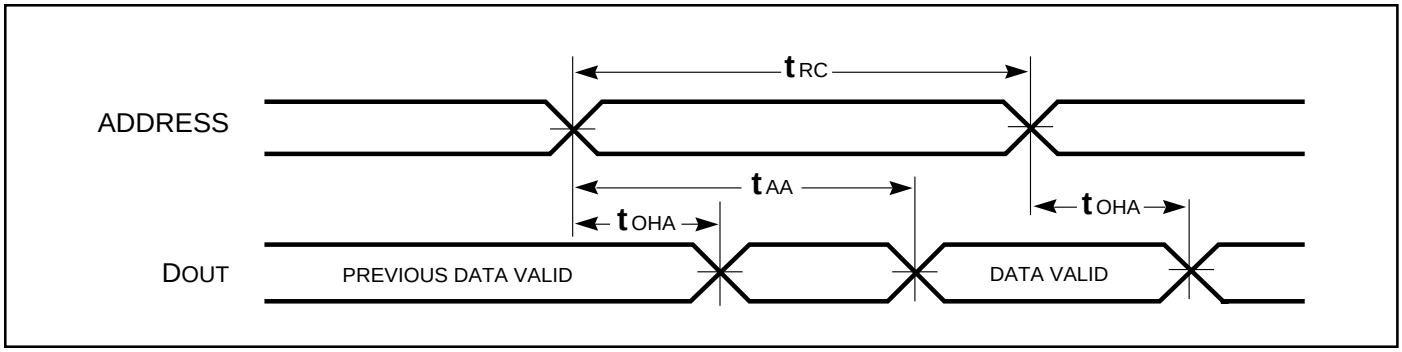

READ CYCLE NO. 2(1,3)

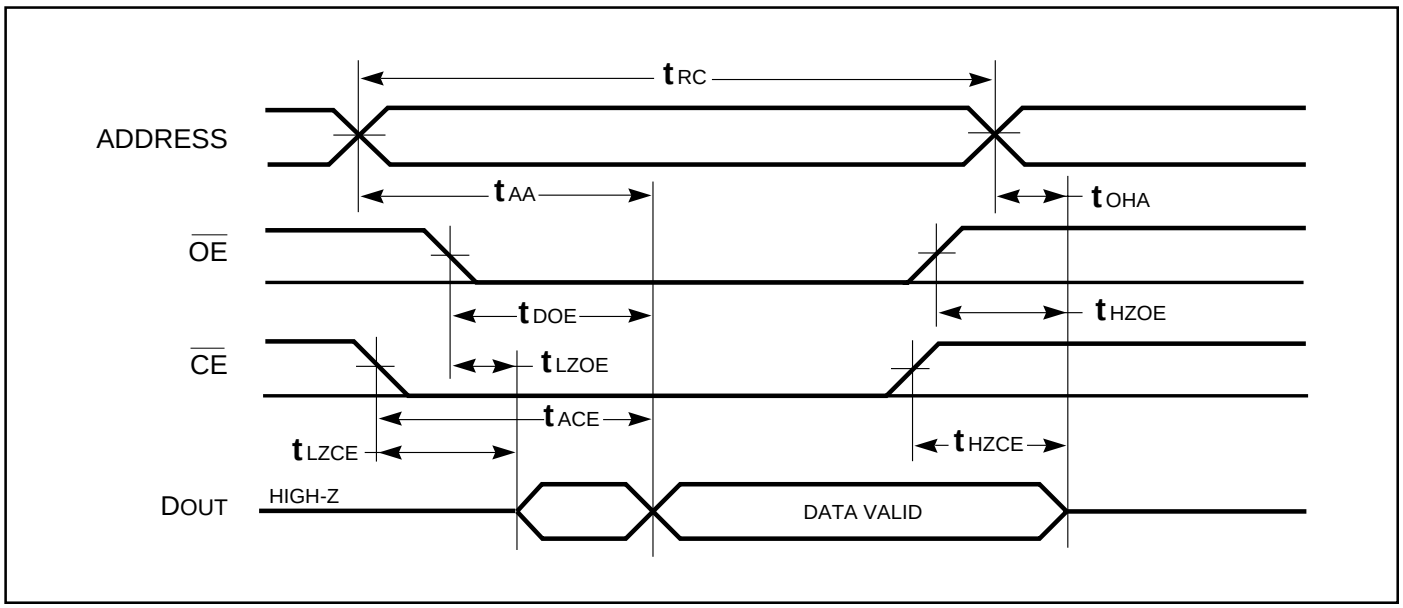

Notes:
1. $\overline{WE}$ is HIGH for a Read Cycle.
2. The device is continuously selected. $\overline{OE}$, $\overline{CE}$ = V_{IL}.
3. Address is valid prior to or coincident with $\overline{CE}$ LOW transitions.

Downloaded from Elcodis.com electronic components distributor

WRITE CYCLE SWITCHING CHARACTERISTICS(1,2) (Over Operating Range)

Symbol	Parameter	-8 ns Min.	-8 ns Max.	-10 ns Min.	-10 ns Max.	-12 ns Min.	-12 ns Max.	-15 ns Min.	-15 ns Max.	-20 ns Min.	-20 ns Max.	Unit
t_{WC}	Write Cycle Time	8	—	10	—	12	—	15	—	20	—	ns
t_{SCE}	$\overline{CE}$ to Write End	7	—	8	—	8	—	10	—	12	—	ns
t_{AW}	Address Setup Time to Write End	7	—	8	—	8	—	10	—	12	—	ns
t_{HA}	Address Hold from Write End	0	—	0	—	0	—	0	—	0	—	ns
t_{SA}	Address Setup Time	0	—	0	—	0	—	0	—	0	—	ns
t_{PWE1}	$\overline{WE}$ Pulse Width($\overline{OE}$ High)	7	—	10	—	12	—	15	—	20	—	ns
t_{PWE2}	$\overline{WE}$ Pulse Width($\overline{OE}$ Low)	6.5	—	7	—	8	—	10	—	12	—	ns
t_{SD}	Data Setup to Write End	4.5	—	5	—	6	—	7	—	10	—	ns
t_{HD}	Data Hold from Write End	0	—	0	—	0	—	0	—	0	—	ns
t_{HZWE}(3)	$\overline{WE}$ LOW to High-Z Output	—	3.5	—	4	—	6	—	7	—	7	ns
t_{LZWE}(3)	$\overline{WE}$ HIGH to Low-Z Output	0	—	0	—	0	—	0	—	0	—	ns

Notes:
1. Test conditions assume signal transition times of 3 ns or less, timing reference levels of 1.5V, input pulse levels of 0 to 3.0V and output loading specified in Figure 1.
2. The internal write time is defined by the overlap of $\overline{CE}$ LOW and $\overline{WE}$ LOW. All signals must be in valid states to initiate a Write, but any one can go inactive to terminate the Write. The Data Input Setup and Hold timing are referenced to the rising or falling edge of the signal that terminates the Write.
3. Tested with the load in Figure 2. Transition is measured ±500 mV from steady-state voltage. Not 100% tested.

AC WAVEFORMS

WRITE CYCLE NO. 1 ($\overline{CE}$ Controlled, $\overline{OE}$ is HIGH or LOW) (1)

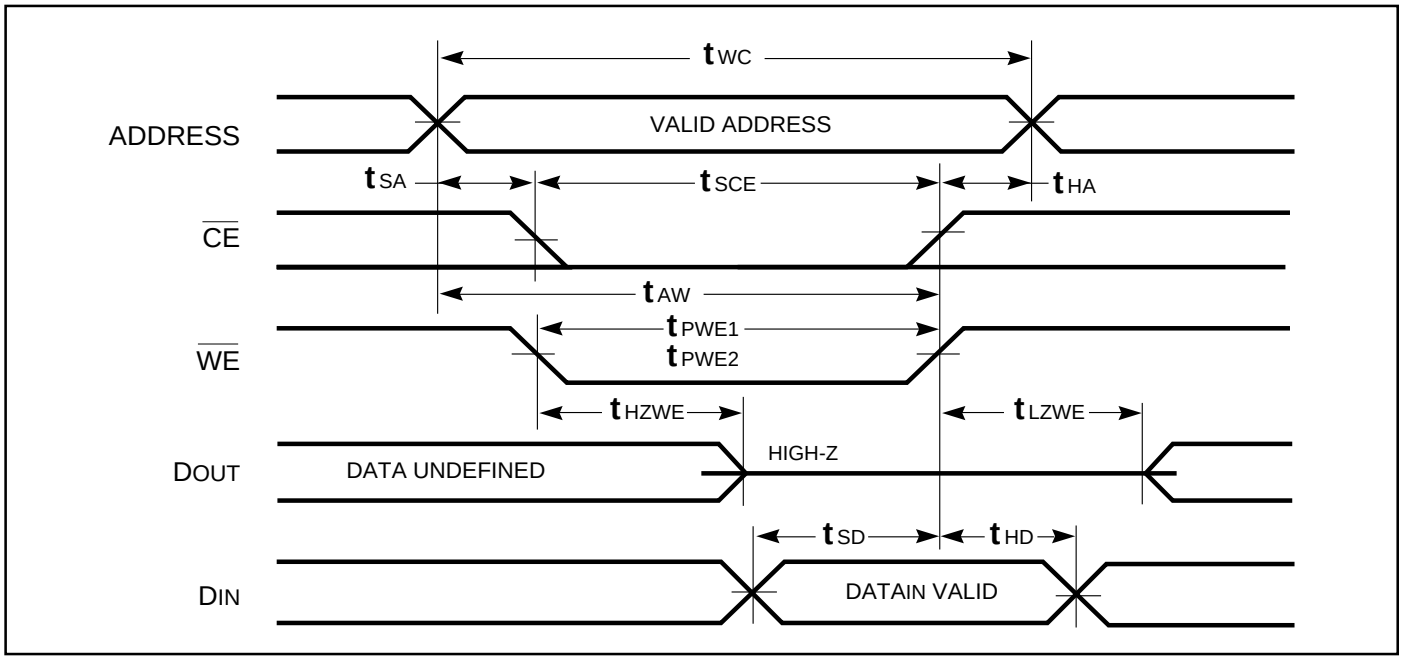

Downloaded from Elcodis.com electronic components distributor

WRITE CYCLE NO. 2 ($\overline{WE}$ Controlled, $\overline{OE}$ is HIGH During Write Cycle) (1,2)

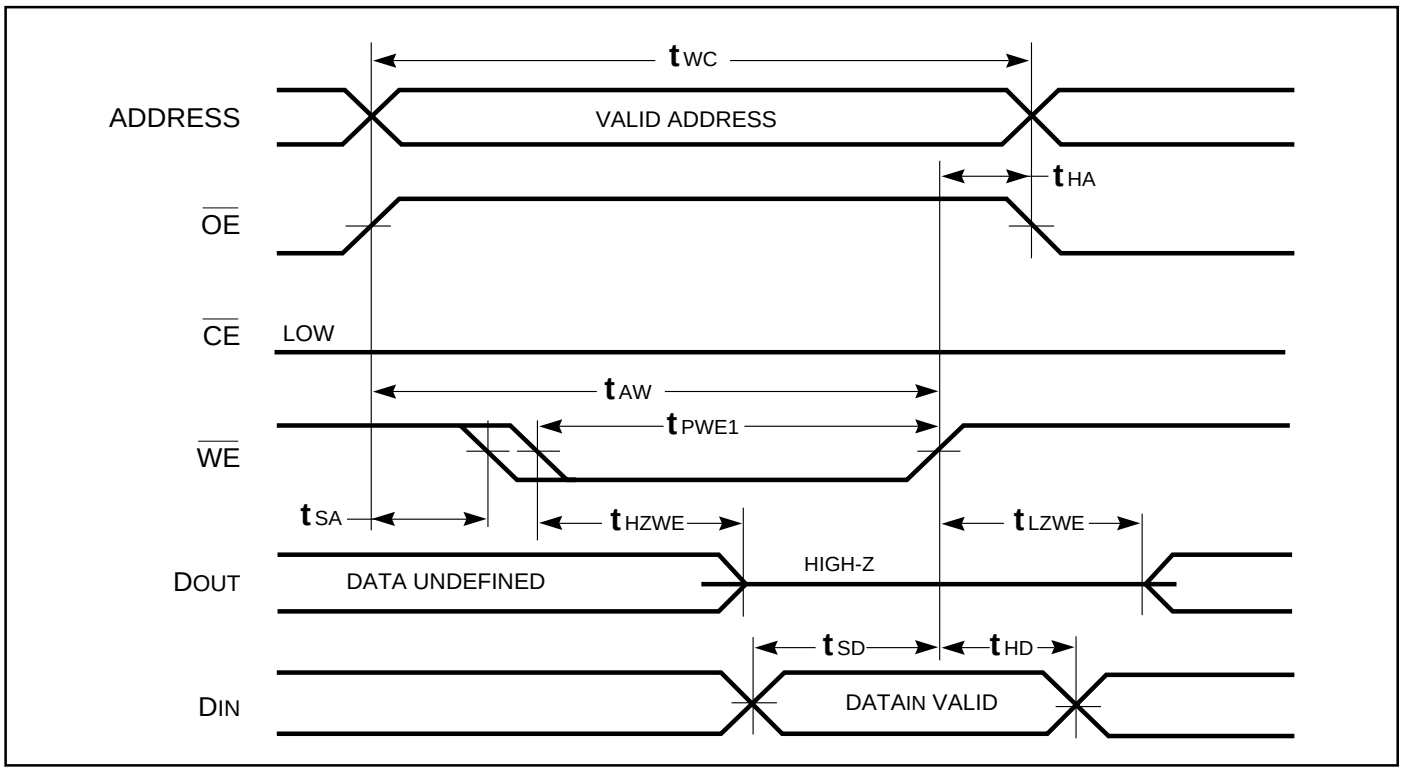

WRITE CYCLE NO. 3 ($\overline{WE}$ Controlled, $\overline{OE}$ is LOW During Write Cycle) (1)

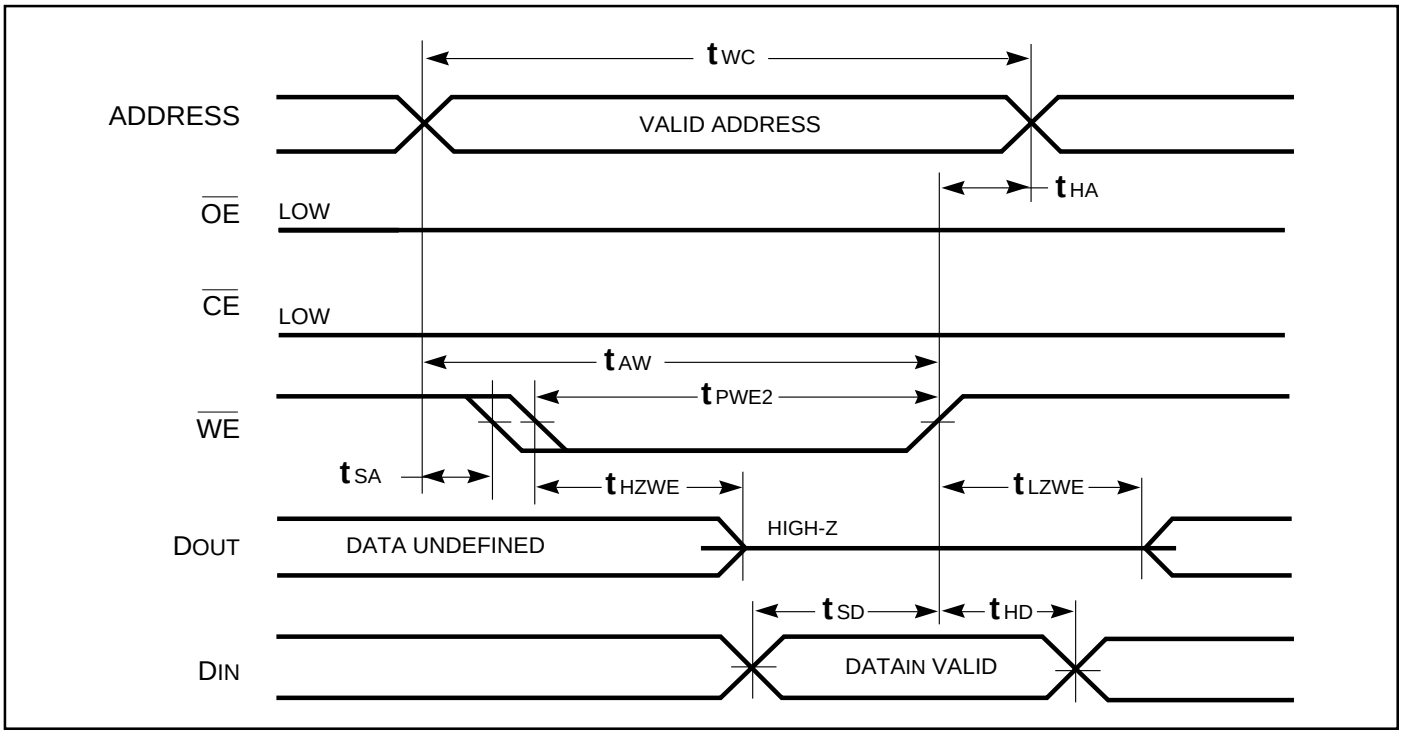

Notes:

1. The internal write time is defined by the overlap of $\overline{CE}$ LOW and $\overline{WE}$ LOW. All signals must be in valid states to initiate a Write, but any one can go inactive to terminate the Write. The Data Input Setup and Hold timing are referenced to the rising or falling edge of the signal that terminates the Write.
2. I/O will assume the High-Z state if $\overline{OE} \geq V_{IH}$.

Downloaded from Elcodis.com electronic components distributor

ORDERING INFORMATION
Commercial Range: 0°C to +70°C

Speed (ns)	Order Part No.	Package
8	IS61LV256-8T IS61LV256-8J	8*13.4mm TSOP-1 300mil SOJ
10	IS61LV256-10T IS61LV256-10J	8*13.4mm TSOP-1 300mil SOJ
12	IS61LV256-12T IS61LV256-12J	8*13.4mm TSOP-1 300mil SOJ
15	IS61LV256-15T IS61LV256-15J	8*13.4mm TSOP-1 300mil SOJ
20	IS61LV256-15T IS61LV256-20J	8*13.4mm TSOP-1 300mil SOJ

ORDERING INFORMATION
Industrial Range: –40°C to +85°C

Speed (ns)	Order Part No.	Package
8	IS61LV256-8TI IS61LV256-8JI	8*13.4mm TSOP-1 300mil SOJ
10	IS61LV256-10TI IS61LV256-10JI	8*13.4mm TSOP-1 300mil SOJ
12	IS61LV256-12TI IS61LV256-12JI	8*13.4mm TSOP-1 300mil SOJ
15	IS61LV256-15TI IS61LV256-15JI	8*13.4mm TSOP-1 300mil SOJ
20	IS61LV256-20TI IS61LV256-20JI	8*13.4mm TSOP-1 300mil SOJ

Integrated Circuit Solution Inc.
HEADQUARTER:
NO.2, TECHNOLOGY RD. V, SCIENCE-BASED INDUSTRIAL PARK,
HSIN-CHU, TAIWAN, R.O.C.
TEL: 886-3-5780333
Fax: 886-3-5783000

BRANCH OFFICE:
7F, NO. 106, SEC. 1, HSIN-TAI 5TH ROAD,
HSICHIH TAIPEI COUNTY, TAIWAN, R.O.C.
TEL: 886-2-26962140
FAX: 886-2-26962252
http://www.icsi.com.tw

Downloaded from Elcodis.com electronic components distributor