THIS DRAWING IS UNPUBLISHED. RELEASED FOR PUBLICATION -/- -
© COPYRIGHT — BY TYCO ELECTRONICS CORPORATION. ALL RIGHTS RESERVED.

USE	DIST
DF	D1

REVISIONS

P	LTR	DESCRIPTION	DATE	DWN	APVD
	C	REV PER ECO-08-022907	17OCT2008	PK	BW

1. THIS PLUG WILL MATE WITH ANY SIZE 3,44 POSN. RECEPTACLE IN AMPLIMITE SERIES.
2. CONNECTOR SUPPLIED WITHOUT CONTACTS; SHOWN FOR ILLUSTRATION ONLY.
3. BE-CU RETENTION CLIPS ARE INCLUDED IN INSERTS AND INSTALLED WITH TINES POINTING TOWARDS MATING FACE.
4. OVERALL DIMENSIONS DO NOT INCLUDE RAISED CAVITY IDENTIFICATION
5. MARKING FAR SIDE REFERS TO WIDE SIDE OF KEYSTONE. NEAR SIDE REFERS TO NARROW SIDE OF KEYSTONE
6. 100% INSPECTION REQUIRED PER BOEING 1B01:
   A. VISUAL
   B. DWV
   C. IR
7. CUSTOMER REQUIRES SINGLE LOT DATE CODE.

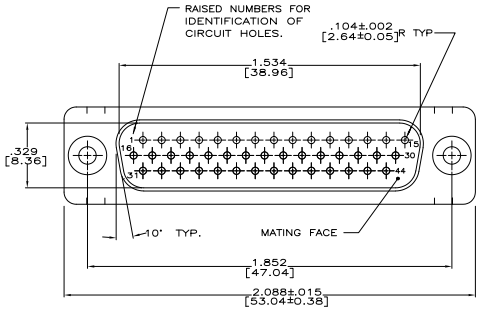

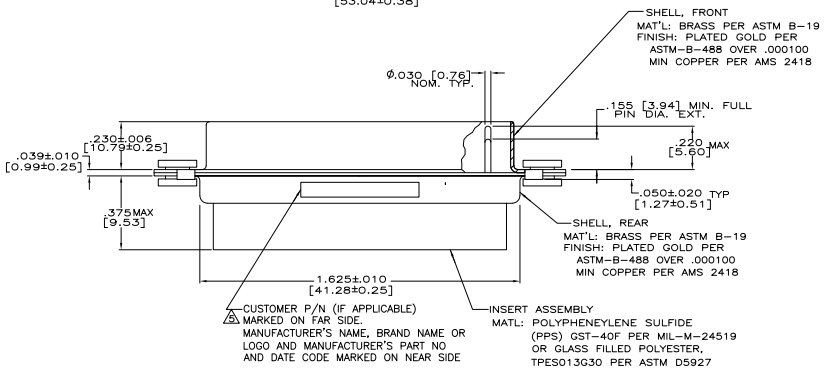

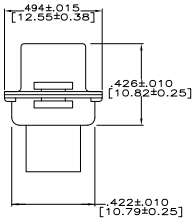

REMARKS	CUSTOMER PART NO	PART NO
6	1B01-021PHW	1-211663-1
6	1B01-021	211663-1

THIS DRAWING IS A CONTROLLED DOCUMENT.

DIMENSIONS: INCHES

TOLERANCE UNLESS OTHERWISE SPECIFIED: 0 PLC ± — ; 1 PLC ± — ; 2 PLC ± — ; 3 PLC ± .005 [0.13] ; 4 PLC ± — ; ANGLES ± —

MATERIAL: SEE CALLOUTS

FINISH: SEE CALLOUTS

DRN J.A.Baker 05-02-95
CHK T.T. 07-27-95
APVD J.NORTON 07-27-95
PRODUCT SPEC —
APPLICATION SPEC —
WEIGHT —

Tyco Electronics
Tyco Electronics Corporation
Harrisburg, PA 17105-3608

NAME: PLUG ASS'Y,AMPLIMITE, 44 POSN., SIZE 3, SERIES 90, NON-MAGNETIC

SIZE A1 | CAGE CODE 00779 | DRAWING NO C-211663 | RESTRICTED TO —

CUSTOMER DRAWING | SCALE 4:1 | SHEET 1 OF 1 | REV C

AMP 4805 REV 31MW2000

Downloaded from Elcodis.com electronic components distributor