THIS DRAWING IS UNPUBLISHED. RELEASED FOR PUBLICATION -.-.-
© COPYRIGHT - BY TYCO ELECTRONICS CORPORATION. ALL INTERNATIONAL RIGHTS RESERVED.

PROD CODE	UOC	DIST
5066	DF	D0

REVISIONS

P	LTR	DESCRIPTION	DATE	DRN	APVD
	E	REVISED PER ECO-10-025541	24DEC10	SK	RL

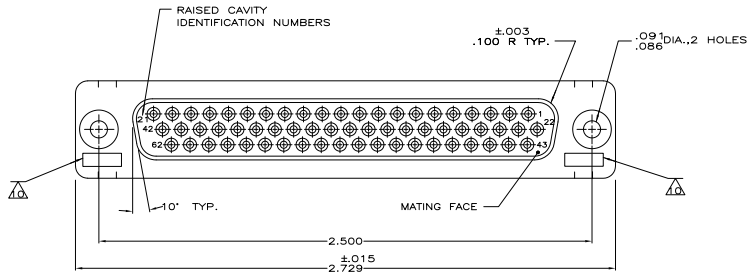

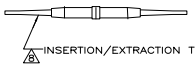

INSERTION/EXTRACTION TOOL

SOCKET CONTACT, SIZE 22, 62 REQD.
BODY-MATL: BERYLLIUM COPPER PER QQ-C-530
FINISH: PLATED GOLD .000050 MIN. THK.
PER MIL-G-45204 OVER NICKEL .000050 MIN.
THK. PER QQ-N-290
HOOD-MAT'L: STAINLESS STEEL PER QQ-S-766
FINISH: PASSIVATED PER QQ-P-35B

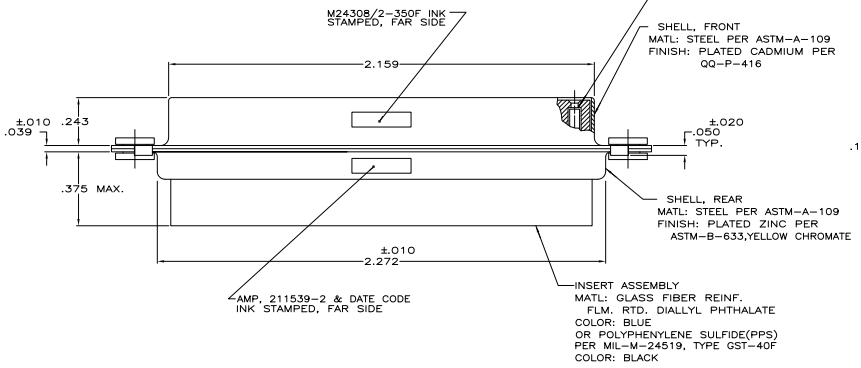

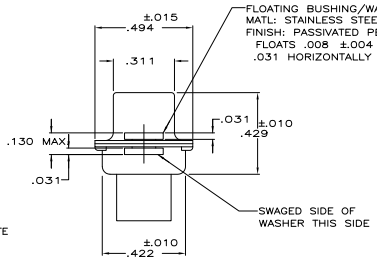

FLOATING BUSHING/WASHER, 2 REQ'D.
MATL: STAINLESS STEEL PER ASTM-A-582
FINISH: PASSIVATED PER QQ-P-35B
FLOATS .008 ±.004 VERTICALLY &
.031 HORIZONTALLY

1. THIS RECEPTACLE WILL MATE WITH ANY 62 POSN.,SIZE 4 PLUG IN AMPLIMITE SERIES.
2. MAXIMUM WIRE INSULATION TO BE USED WITH THIS RECEPTACLE IS .054 DIA.
3. SST RETENTION CLIPS ARE INCLUDED IN INSERTS.

4. PACKAGE STAMPED M24308/2-490F & AMP P/N 211539-1
5. PACKAGE STAMPED M24308/2-350F & AMP P/N 211539-2
6. PACKAGE STAMPED M24308/2-361F & AMP P/N 211539-3
7. AMP P/N 204351-1; MIL P/N 57-354, INCLUDED IN KIT
8. AMP P/N 91067-1; MIL P/N M81969/1-04
9. CONNECTOR SUPPLIED WITHOUT CONTACTS; SHOWN FOR ILLUSTRATION ONLY.
10. UL/CSA DESIGNATION STAMPED IN THIS AREA,OPTIONAL

			PART NO
SUPSD BY 204542-2 & 91067-1	SAME AS -1 EXCEPT:	6 7 8	211539-3
	SAME AS -1 EXCEPT:	5 7	211539-2
	AS SHOWN	4 9	211539-1
	DESCRIPTION		

THIS DRAWING IS A CONTROLLED DOCUMENT

DRAWN	6-20-85	7-1-85
CHECKED	6-20-85	
SUPERVISOR	9-20-85	9-23-85
ENGINEERING	R.GRZYBOWSKI	

Tyco Electronics Corporation
Harrisburg, PA 17105-3608

DIMENSIONS: INCHES
TOLERANCE UNLESS OTHERWISE SPECIFIED:
0 PLC ± –
1 PLC ± –
2 PLC ± –
3 PLC ± .005
4 PLC ± .002
ANGLES ± –

MATERIAL: SEE CALLOUT
FINISH: SEE CALLOUT

PRODUCT SPEC –
APPLICATION SPEC –
WEIGHT –

NAME: RECEPTACLE ASS'Y., AMPLIMITE, 62 POSN., SIZE 4, SERIES 90, W/DUAL FLOAT BUSHINGS

SIZE	CAGE CODE	DRAWING NO	RESTRICTED TO
A1	00779	C-211539	–

CUSTOMER DRAWING | SCALE NTS | SHEET 1 OF 1 | REV F

4805 (1/98)

Downloaded from Elcodis.com electronic components distributor