THIS DRAWING IS UNPUBLISHED. RELEASED FOR PUBLICATION
© COPYRIGHT - By - ALL RIGHTS RESERVED.

LOC	DIST
—	—

REVISIONS

P	LTR	DESCRIPTION	DATE	DWN	APVD
	S	REV PER ECO 11-17711	10-18-11	CT	RL

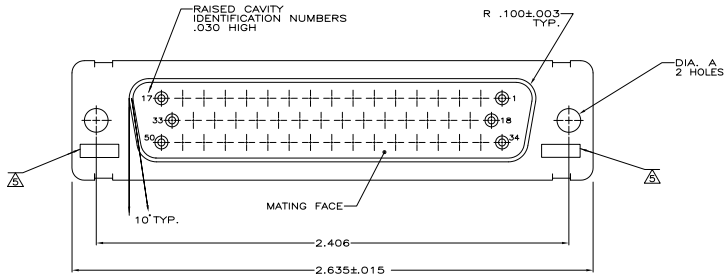

1. THIS RECEPTACLE WILL MATE WITH ANY PLUG CONNECTOR WITH THE SAME INSERT ARRANGEMENT AS DEFINED BY MS18277-1.
2. MAXIMUM WIRE INSULATION USED WITH THIS RCPT. IS .072 DIA. MAX.
3. Be-Cu RETENTION CLIPS ARE INCLUDED IN INSERTS.
4. FAR SIDE REFERS TO WIDE SIDE OF KEYSTONE.
5. UL/CSA DESIGNATION STAMPED IN THIS AREA,OPTIONAL
6. THIS CONNECTOR IS QUALIFIED TO GODDARD SPACE FLIGHT CENTER S-311-P-4.
7. RESTRICTRD TO CAE ELECTRONICS ONLY.
8. CONNECTOR SUPPLIED WITH 50 CONTACTS, AMP PART NUMBER 206793-1; (NOT INSTALLED).

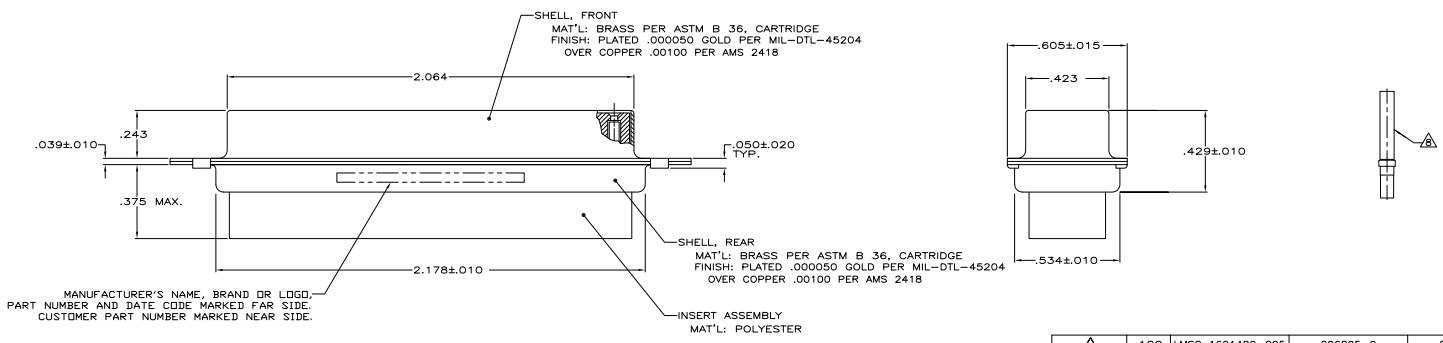

REMARKS	DIA A	MARKED CUSTOMER P/N	MARKED MFG P/N	PART NUMBER
8	.120	LMSC 1621480-005	206805-9	206805-9
	.120	LMSC 1621480-005	206805-8	206805-8
6 7	.120	311P409-5S-B-12	206805-2	206805-7
NOT RELEASED FOR PRODUCTION	——	1A01-032RHA	——	206805-6
OBSOLETE	——	——	——	206805-5
OBSOLETE	.120	2A014-010V-001	206805-4	206805-4
	.154		206805-3	206805-3
6	.120	311P409-5S-B-12	206805-2	206805-2
6	.154	311P409-5S-B-15	206805-1	206805-1

THIS DRAWING IS A CONTROLLED DOCUMENT.

DIMENSIONS: INCHES

TOLERANCES UNLESS OTHERWISE SPECIFIED:
0 PLC ± -
1 PLC ± -
2 PLC ± -
3 PLC ± .005
4 PLC ± -
ANGLES ± -

MATERIAL: SEE CALLOUTS
FINISH: SEE CALLOUTS

DWN: M.CLOUSER 1-4-89
CHK: T.CANTLIN 1-24-89
APVD: -
PRODUCT SPEC: —
APPLICATION SPEC: —
WEIGHT: —

TE Connectivity

NAME: RECEPTACLE FOR SOCKET CONTACTS, SERIES 109, 50 POSITION, AMPLIMITE

SIZE: A1 | CAGE CODE: 00779 | DRAWING NO: C-206805 | RESTRICTED TO: —

CUSTOMER DRAWING | SCALE: 4:1 | SHEET 1 OF 1 | REV: S

4805 (3/11)

Downloaded from Elcodis.com electronic components distributor