DRAWING MADE IN AMERICAN PROJECTION

© 1970 BY AMP INCORPORATED. ALL RIGHTS RESERVED. AMP PRODUCTS COVERED BY PATENTS AND/OR PATENTS PENDING.

Unpublished copy not to be reproduced or published without written permission of AMP Incorporated

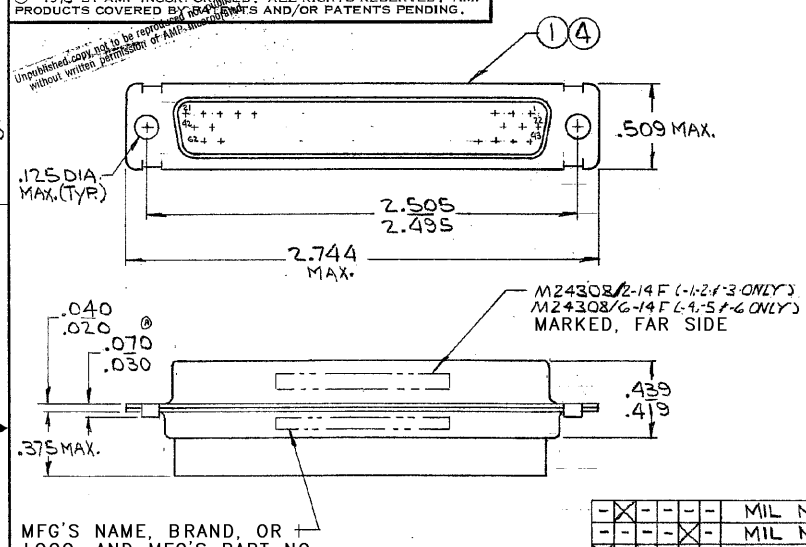

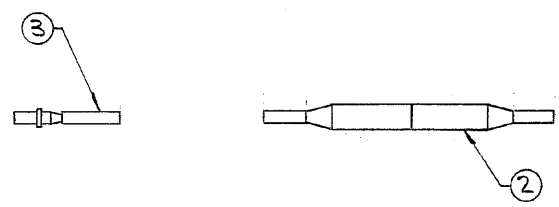

MFG'S NAME, BRAND, OR LOGO, AND MFG'S PART NO AND DATE CODE MARKED ON FAR SIDE

2 SUPSD BY 206503-9 & (62) 206071-1 & 91067-1

REVISIONS

ZONE	LTR	DESCRIPTION		DATE	APPROVED
	A	REV. PER ECN B-948	LM	5/11/73	[illegible]
	B	ITEM 2 WAS 91054-1 ECN C-878	[illegible]	3/19/74	DER
	C	REV PER ECN J-709		9-8-82	[illegible]
	D	REV DF-0541, DF-0021, DF-0160, R-2670	[illegible]	1-13-88	EAM
	E	REV PER DF4250	[illegible]	5-91	[illegible]
	F	REV PER 0600-6687-97	JY	8-98	OT
	G	ECO-08-023688	PY	11-08	BW

-6	-5	-4	-3	-2	-1	DWG SIZE	NUMBER	NAME	ITEM NO.
-	X	-	-	-	-		MIL No.	M24308/6-14F MARKED ON PACKAGE	
-	-	-	-	X	-		MIL No.	M24308/2-14F MARKED ON PACKAGE	
X	-	-	-	-	-		MIL No.	M24308/6-20F MARKED ON PACKAGE	
-	-	-	X	-	-		MIL No.	M24308/2-20F MARKED ON PACKAGE	
1	1	1	-	-	-	C	204506-2	RECEPTACLE ASSY, SIZE 4 (BRASS SHELL)	4
62	62	-	62	62	-	B	204351-1	CONTACT, SOCKET, SIZE 22D	3
1	-	1	1	-	1	B	91067-1	INSERTION / EXTRACTION TOOL	2
-	-	-	1	1	1	C	204506-1	RECEPTACLE ASSY, SIZE 4 (STEEL SHELL)	1
204518	204518	204518	204518	204518	204518				
2	OBS								

UNLESS OTHERWISE SPECIFIED DIMENSIONS ARE IN INCHES
TOLERANCES ON:
DECIMALS ±
ANGLES ±

MATERIAL

CONTRACT NO.
DR. [illegible] 12/1/70
CHK [illegible] 12-3-70
APPD [illegible] 12-8-70
REL [illegible] 12-9-70
DSGN APPD
OTHER APPD

AMP INCORPORATED
HARRISBURG, PENNSYLVANIA

NAME
KIT, "HDD" SERIES, RECEPTACLE, SIZE #4 (62 POS.)

SIZE	CODE IDENT NO.	NUMBER	REV
B	00779	204518	G

SCALE
SHEET 1 OF 1

AMP 1470-1 REV (7/68)

CUSTOMER DRAWING

Downloaded from Elcodis.com electronic components distributor