THIS DRAWING IS UNPUBLISHED. RELEASED FOR PUBLICATION J9
© COPYRIGHT 19 BY AMP INCORPORATED. ALL RIGHTS RESERVED.

LOC	DIST
DF	D0

REVISIONS

P	LTR	DESCRIPTION	DATE	DWN	APVD
	A	REV PER ECO-09-25654	24NOV09	PY	DM

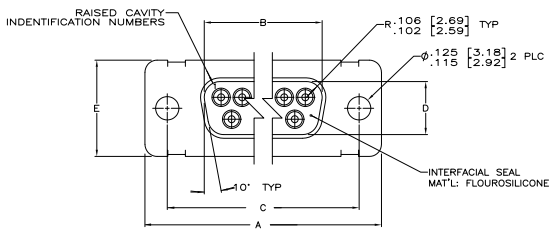

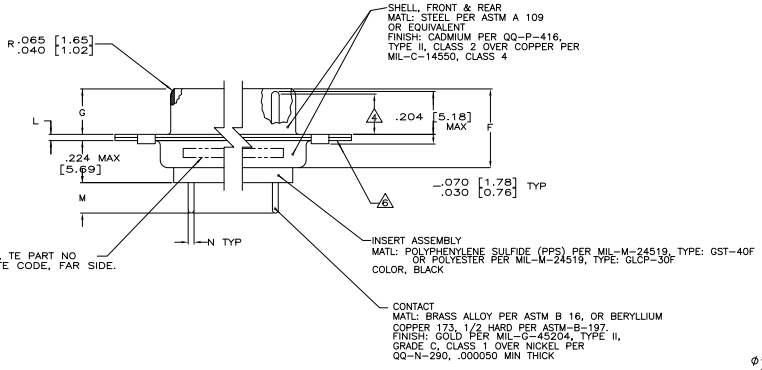

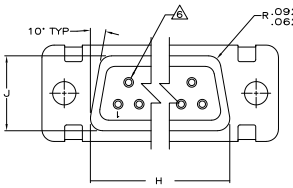

1. TRUE POSITION TOLERANCE FOR P.C.BOARD LAYOUT IS .010 [0.25] AT MAX MATERIAL CONDITION. SUGGESTED BOARD THICKNESS IS .094 [2.39]
2. THE CONNECTORS DESCRIBED IN THIS DOCUMENT MEET THE REQUIREMENTS OF MIL-C-24308 AND MATE WITH ANY RECEPTACLE CONNECTOR WITH SAME INSERT ARRANGEMENT.
3. MARK WITH .047 [1.19]-.062 [1.57] HIGH CHARACTERS.
   FAR SIDE REFERS TO THE WIDE SIDE OF THE KEYSTONE.
   NEAR SIDE REFERS TO THE NARROW SIDE OF THE KEYSTONE.
   IF THE REAR SHELL IS TOO SMALL FOR "AMP", AMP PART NUMBER AND DATE CODE, THEN SPLIT AS FOLLOWS:
   A. AMP PART NUMBER ON REAR SHELL, FAR SIDE.
   B. "AMP" AND DATE CODE ON FRONT SHELL, FAR SIDE.
4. REQUIREMENT FOR FULL PIN DIAMETER EXTENSION:
   .159 [4.04] MIN, SHELL SIZES 1 AND 2.
   .150 [3.81] MIN, SHELL SIZES 3, 4, AND 5.
5. THIS DRAWING SHALL BE INTERPRETED IN ACCORDANCE WITH APPLICABLE STANDARDS LISTED IN MIL-STD-100.
6. APPLY EPOXY BETWEEN THE CONTACT AND INSERT AND BETWEEN THE FRONT AND REAR SHELLS AND INSERT.

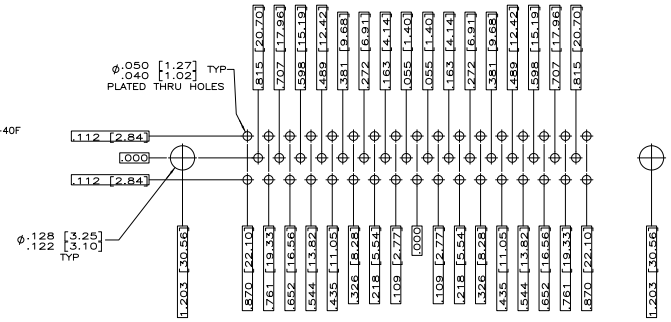

RECOMMENDED P.C. BOARD LAYOUT
SHELL SIZE 5 (50 POSITION)

.033 [0.84] / .027 [0.69]	.176 [4.47] / .136 [3.45]	.049 [1.24] / .029 [0.74]	.544 [13.82] / .524 [13.31]	2.188 [55.58] / 2.168 [55.07]	.236 [5.99] / .224 [5.69]	.436 [11.07] / .416 [10.57]	.620 [15.75] / .590 [14.99]	.446 [11.33] / .436 [11.07]	2.411 [61.24] / 2.401 [60.99]	2.084 [52.93] / 2.074 [52.68]	2.650 [67.31] / 2.620 [66.55]	MS18277-1	50	5	1663842-5	1663842-5
N	M	L	J	H	G	F	E	D	C	B	A	INSERT ARRANGEMENT	NO OF POS	SHELL SIZE	AMP P/N ON CONNECTOR	PART NUMBER

THIS DRAWING IS A CONTROLLED DOCUMENT.

DIMENSIONS: INCHES [mm]

TOLERANCES UNLESS OTHERWISE SPECIFIED:
2 PLC ±
3 PLC ±
4 PLC ±
5 PLC ±
6 PLC ±
ANGLES ±

MATERIAL: SEE CALLOUTS
FINISH: SEE CALOUTS

DR: C.C.THOMAS 12-8-03
CHK: 12-8-03
APV: D.MILLER 12-8-03

PRODUCT SPEC: 2
APPLICATION SPEC: –
WEIGHT: –

CUSTOMER DRAWING

TYCO Electronics
Harrisburg, PA 17105-3608

DWN: AMPLIMITE PLUG ASSY, LOW PROFILE
SIZE 20 POSTED P.C. BOARD CONTACTS
.030 DIA SHORT POST, SERIES 109
WITH INTERFACIAL SEAL AND EPOXY SEALING

SIZE: A1 | CAGE CODE: 00779 | DRAWING NO: 1663842 | RESTRICTED TO: –

SCALE: 4:1 | SHEET 1 OF 1 | REV A

AMP 4805 REV 11JUN97 Translated 07OCT09,101402 (TYMPED-HOMPRO) from Computer-Aided, Inc. Module Revision 15.2.97

Downloaded from Elcodis.com electronic components distributor