THIS DRAWING IS UNPUBLISHED. RELEASED FOR PUBLICATION -.-- -
© COPYRIGHT - BY TYCO ELECTRONICS CORPORATION. ALL RIGHTS RESERVED.

LOC	DIST
DF	AO

REVISIONS

P	LTR	DESCRIPTION	DATE	DRN	APVD
	B	REV PER 0H14-0178-05	3-1-05	CT	JM

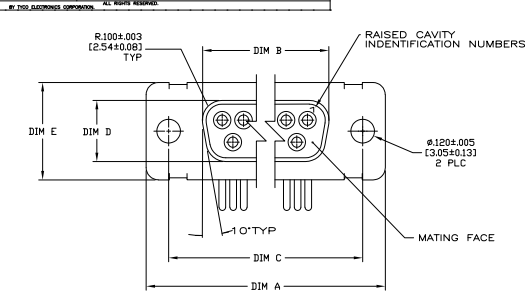

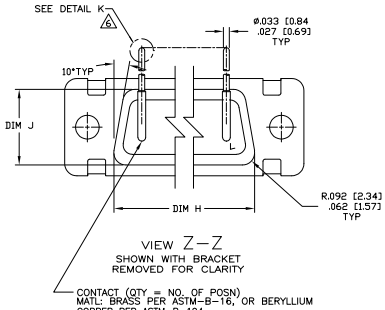

VIEW Z–Z
SHOWN WITH BRACKET
REMOVED FOR CLARITY

CONTACT (QTY = NO. OF POSN)
MATL: BRASS PER ASTM-B-16, OR BERYLLIUM
COPPER PER ASTM-B-194
FINISH: GOLD PER MIL-G-45204, TYPE II,
GRADE C, CLASS I IN CONTACT MATING AREA,
.000010 [0.0003] MIN THK GOLD PER MIL-G-45204
OVER .000050 [0.0013] MIN THK NICKEL
PER QQ-N-290 ON CONTACT BODY

1. SEE SHEET 2 FOR RECOMMENDED P.C. BOARD LAYOUT. TRUE POSITION TOLERANCE FOR P.C.BOARD LAYOUT IS .010 [0.25] AT MAX MATERIAL CONDITION. SUGGESTED BOARD THICKNESS IS .125 [3.18]
2. THE CONNECTORS DESCRIBED IN THIS DOCUMENT MEET THE REQUIREMENTS OF MIL–C–24308 AND MATE WITH ANY PLUG CONNECTOR WITH SAME INSERT ARRANGEMENT.
3. MARKED WITH .047 [1.19]–.062 [1.57] HIGH CHARACTERS.
FAR SIDE REFERS TO THE WIDE SIDE OF THE KEYSTONE.
NEAR SIDE REFERS TO THE NARROW SIDE OF THE KEYSTONE.
IF THE FRONT SHELL IS TOO SMALL FOR "AMP", AMP PART NUMBER AND DATE CODE, MARKING SHALL BE SPLIT AS FOLLOWS:
   A. AMP PART NUMBER ON REAR SHELL, FAR SIDE.
   B. "AMP" AND DATE CODE ON FRONT SHELL, FAR SIDE.
4. POINT OF ELECTRICAL ENGAGEMENT – AS MEASURED WITH A .0390 [0.991]–.0393 [0.998] DIA SQUARE ENDED TEST PIN.
5. THIS DRAWING SHALL BE INTERPRETED IN ACCORDANCE WITH APPLICABLE STANDARDS LISTED IN MIL–STD–100.
6. SOLDER DIP PER MIL–STD–2000 COMPOSITION Sn63 CONFORMING TO QQ–S–571 IN THE ENTIRE AREA OF DIMENSION SHOWN. 1218846–6 THRU –10 ONLY.

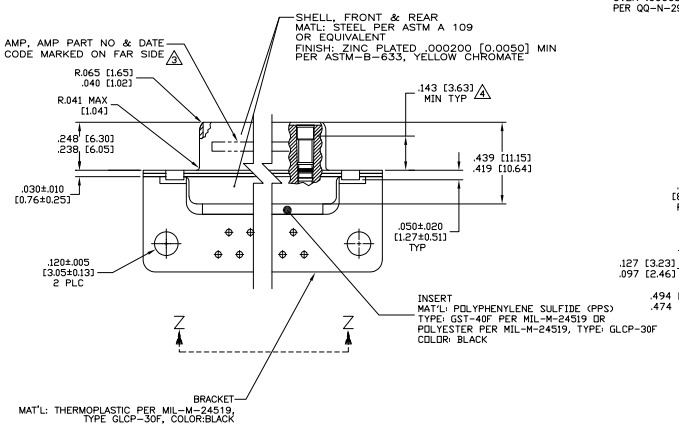

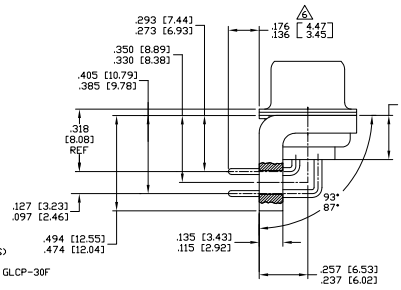

SHELL SIZES 1 THRU 4 CONTACT
CONFIGURATION

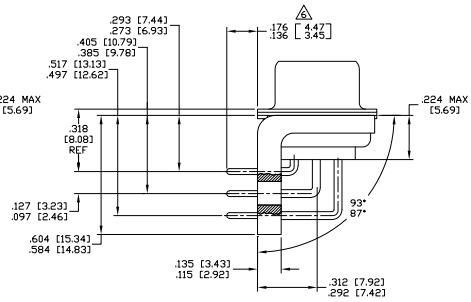

SHELL SIZE 5 CONTACT
CONFIGURATION

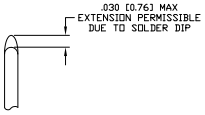

DETAIL K
SCALE 8:1 5
FOR 1218846–6 THRU –10 ONLY

DIM J	DIM H	DIM E	DIM D	DIM C	DIM B	DIM A	INSERT ARRANGEMENT	NO OF POS	SHELL SIZE	AMP PART NO.
.544 [13.82] / .524 [13.31]	2.188 [55.58] / 2.168 [55.07]	.620 [15.75] / .590 [14.99]	.428 [10.87] / .418 [10.62]	2.411 [61.24] / 2.401 [60.99]	2.069 [52.55] / 2.059 [52.30]	2.650 [67.31] / 2.620 [66.55]	MS18277–1	50	5	1–1218846–0 6
.432 [10.97] / .412 [10.46]	2.282 [57.96] / 2.262 [57.45]	.509 [12.93] / .479 [12.17]	.318 [8.03] / .306 [7.77]	2.505 [63.63] / 2.495 [63.37]	2.164 [54.97] / 2.154 [54.71]	2.744 [69.70] / 2.714 [68.94]	MS18276–1	37	4	1218846–9 6
.432 [10.97] / .412 [10.46]	1.635 [41.53] / 1.615 [41.02]	.509 [12.93] / .479 [12.17]	.318 [8.03] / .306 [7.77]	1.857 [47.17] / 1.847 [46.91]	1.516 [38.51] / 1.506 [38.25]	2.103 [53.42] / 2.073 [52.65]	MS18275–1	25	3	1218846–8 6
.432 [10.97] / .412 [10.46]	1.093 [27.76] / 1.073 [27.25]	.509 [12.93] / .479 [12.17]	.318 [8.03] / .306 [7.77]	1.317 [33.45] / 1.307 [33.20]	.976 [24.79] / .966 [24.54]	1.556 [39.52] / 1.526 [38.76]	MS18274–1	15	2	1218846–7 6
.432 [10.97] / .412 [10.46]	.769 [19.53] / .749 [19.02]	.509 [12.93] / .479 [12.17]	.318 [8.03] / .306 [7.77]	.989 [25.12] / .979 [24.87]	.648 [16.46] / .638 [16.21]	1.228 [31.19] / 1.198 [30.43]	MS18273–1	9	1	1218846–6 6
.544 [13.82] / .524 [13.31]	2.188 [55.58] / 2.168 [55.07]	.620 [15.75] / .590 [14.99]	.428 [10.87] / .418 [10.62]	2.411 [61.24] / 2.401 [60.99]	2.069 [52.55] / 2.059 [52.30]	2.650 [67.31] / 2.620 [66.55]	MS18277–1	50	5	1218846–5
.432 [10.97] / .412 [10.46]	2.282 [57.96] / 2.262 [57.45]	.509 [12.93] / .479 [12.17]	.318 [8.03] / .306 [7.77]	2.505 [63.63] / 2.495 [63.37]	2.164 [54.97] / 2.154 [54.71]	2.744 [69.70] / 2.714 [68.94]	MS18276–1	37	4	1218846–4
.432 [10.97] / .412 [10.46]	1.635 [41.53] / 1.615 [41.02]	.509 [12.93] / .479 [12.17]	.318 [8.03] / .306 [7.77]	1.857 [47.17] / 1.847 [46.91]	1.516 [38.51] / 1.506 [38.25]	2.103 [53.42] / 2.073 [52.65]	MS18275–1	25	3	1218846–3
.432 [10.97] / .412 [10.46]	1.093 [27.76] / 1.073 [27.25]	.509 [12.93] / .479 [12.17]	.318 [8.03] / .306 [7.77]	1.317 [33.45] / 1.307 [33.20]	.976 [24.79] / .966 [24.54]	1.556 [39.52] / 1.526 [38.76]	MS18274–1	15	2	1218846–2
.432 [10.97] / .412 [10.46]	.769 [19.53] / .749 [19.02]	.509 [12.93] / .479 [12.17]	.318 [8.03] / .306 [7.77]	.989 [25.12] / .979 [24.87]	.648 [16.46] / .638 [16.21]	1.228 [31.19] / 1.198 [30.43]	MS18273–1	9	1	1218846–1

THIS DRAWING IS A CONTROLLED DOCUMENT.

DIMENSIONS: INCHES [mm]
TOLERANCE UNLESS OTHERWISE SPECIFIED: 0 PLC ± – ; 1 PLC ± – ; 2 PLC ± – ; 3 PLC ± .010 [0.25] ; 4 PLC ± – ; ANGLES ± –
MATERIAL: SEE CALOUTS
FINISH: SEE CALOUTS

DR C.C.THOMAS 10-30-00
CK CHAD BAKER 1-19-01
APV CHAD BAKER 1-19-01
PRODUCT SPEC –
APPLICATION SPEC –
WEIGHT –

Tyco Electronics Corporation
Harrisburg, Pa 17105-3608

NAME RECEPTACLE ASSY,AMPLIMITE,RIGHT ANGLE,SERIES 109,SIZE 1 THRU 5

SIZE A1 CAGE CODE 00779 DRAWING NO C-1218846 RESTRICTED TO –

CUSTOMER DRAWING SCALE 4:1 SHEET 1 OF 2 REV B

AMP 4805 REV 31MM2000

Downloaded from Elcodis.com electronic components distributor

THIS DRAWING IS UNPUBLISHED. RELEASED FOR PUBLICATION -.-.-
© COPYRIGHT - BY TYCO ELECTRONICS CORPORATION. ALL RIGHTS RESERVED.

LOC	DIST
DF	D0

REVISIONS

P	LTR	DESCRIPTION	DATE	DWN	APVD
–		SEE SHEET 1	–	–	–

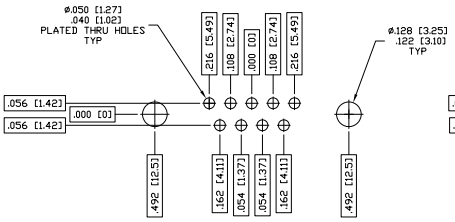

RECOMMENDED P.C. BOARD LAYOUT
SHELL SIZE 1 (9 POSITION)

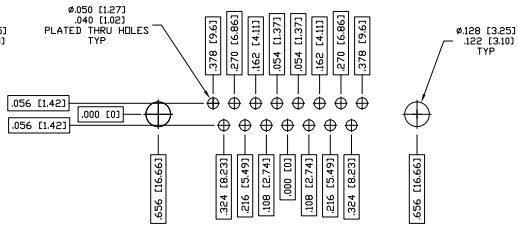

RECOMMENDED P.C. BOARD LAYOUT
SHELL SIZE 2 (15 POSITION)

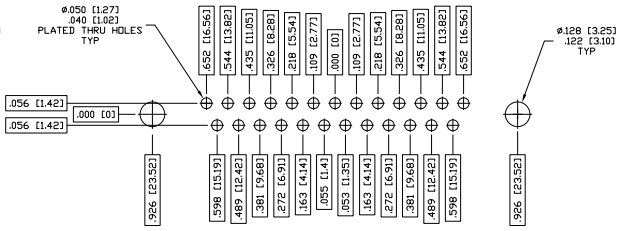

RECOMMENDED P.C. BOARD LAYOUT
SHELL SIZE 3 (25 POSITION)

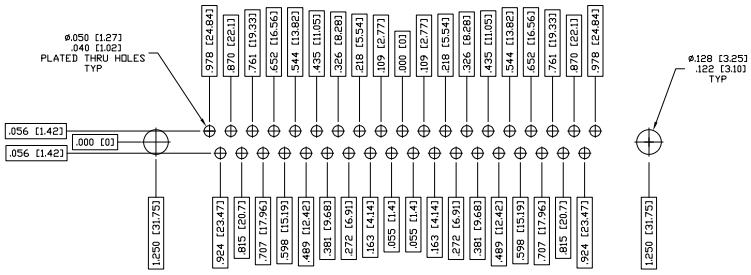

RECOMMENDED P.C. BOARD LAYOUT
SHELL SIZE 4 (37 POSITION)

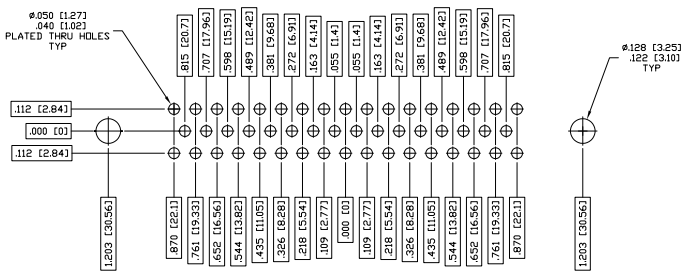

RECOMMENDED P.C. BOARD LAYOUT
SHELL SIZE 5 (50 POSITION)

THIS DRAWING IS A CONTROLLED DOCUMENT.

DIMENSIONS: INCHES

TOLERANCE UNLESS OTHERWISE SPECIFIED:
0 PLC ± –
1 PLC ± –
2 PLC ± –
3 PLC ± .010 [0.25]
4 PLC ± .005
ANGLES ± 1°

MATERIAL: SEE CALLOUTS
FINISH: SEE CALLOUTS

DR: C.C.THOMAS 10-30-00
CHK: CHAD BAKER 1-19-01
APVD: CHAD BAKER 1-19-01
PRODUCT SPEC: –
APPLICATION SPEC: –
WEIGHT: –

CUSTOMER DRAWING

Tyco Electronics Corporation
Harrisburg, Pa 17105-3608

NAME: RECEPTACLE ASSY,AMPLIMITE RIGHT ANGLE,SERIES 109,SIZE 1 THRU 5

SIZE: A1 CAGE CODE: 00779 DRAWING NO: C-1218846 RESTRICTED TO: –

SCALE: 4:1 SHEET: 2 OF 2 REV: B

AMP 4805 REV 3\NWG000

10-APR-02 14:30:36 amp16412 /home/cpc16412/admrad

Downloaded from Elcodis.com electronic components distributor