THIS DRAWING IS UNPUBLISHED. RELEASED FOR PUBLICATION -.-.-
© COPYRIGHT - BY TYCO ELECTRONICS CORPORATION. ALL INTERNATIONAL RIGHTS RESERVED.

LOC	DIST
—	—

REVISIONS

P	LTR	DESCRIPTION	DATE	DRN	APVD
	S	REV PER ECO 08-019991	12-8-08	CT	RL

1. THIS RECEPTACLE WILL MATE WITH ANY PLUG CONNECTOR WITH THE SAME INSERT ARRANGEMENT AS DEFINED BY MS14004-1.
2. MAXIMUM WIRE INSULATION USED WITH THIS RCPT. IS .054 [1.37] DIA.
3. Be-Cu RETENTION CLIPS ARE INCLUDED IN INSERTS.
4. INSPECTION REQUIREMENTS PER R4383.
5. CONNECTOR SUPPLIED WITH 115 CONTACTS, AMP PART NUMBER 206071-1. INSPECTION REQUIREMENTS PER R4383 WITHOUT TESTS FOR HIGH ALTITUDE DIELECTRIC WITHSTANDING VOLTAGE AS CALLED FOR IN TABLE II SCREENING AND TESTING.
6. UL/CSA DESIGNATION STAMPED IN THIS AREA,OPTIONAL
7. SPECIAL TESTING PER GE DOCUMENT 20025720. CONNECTOR SUPPLIED WITH 114 CONTACTS, AMP P/N 206071-1.
8. RESTRICTED TO CAE ELECTRONICS ONLY.
9. THESE CONNECTORS ARE QUALIFIED TO GODDARD SPACE FLIGHT CENTER SPECIFICATION S-311-P-4.

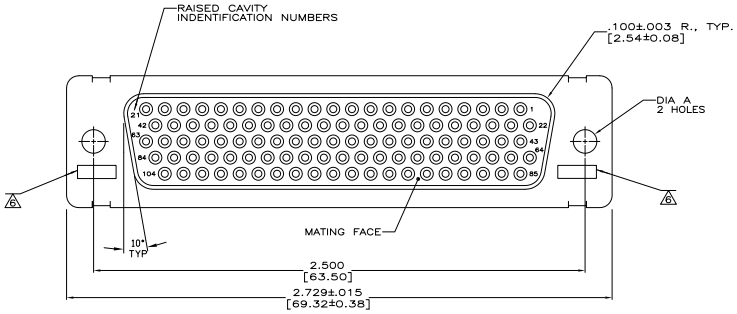

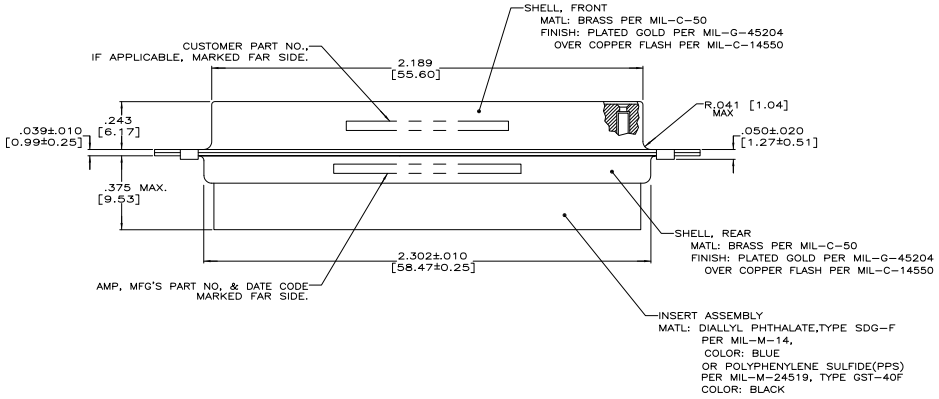

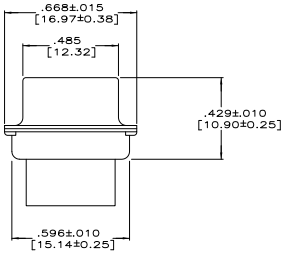

AMP P/N 206071-1
GSFC P/N G-08-S1
(SUPPLIED WITH 206064-6 AND 206064-7 ONLY)

	.120 [3.05]	570566-6	206065-9	206065-9
8 9	.120 [3.05]	311P407-6S-B-12	206065-4	206065-8
7	.120 [3.05]	20025720P1104S	206065-7	206065-7
5	.120 [3.05]	R4383P104S	206065-6	206065-6
4	.120 [3.05]	R4383P104S-2	206065-5	206065-5
9	.120 [3.05]	311P407-6S-B-12	206065-4	206065-4
—	.154 [3.91]	---	206065-3	206065-3
9	.154 [3.91]	311P407-6S-B-15	206065-2	206065-2
—	.120 [3.05]	R9259P104S	206065-1	206065-1
REMARKS	DIA A	CUSTOMER P/N ON CONNECTOR	AMP P/N ON CONNECTOR	PART NO.

THIS DRAWING IS A CONTROLLED DOCUMENT.

DIMENSIONS: INCHES

TOLERANCE UNLESS OTHERWISE SPECIFIED:
0 PLC ± –
1 PLC ± –
2 PLC ± –
3 PLC ± .005 [0.13]
ANGLES ± 0.25°

MATERIAL: SEE CALLOUTS

FINISH: SEE CALLOUTS

DR S.GLATFELTER 11-10-88
CK E.A.McDOUGLE 11-10-88
APV E.McDOUGLE 11-10-88
PRODUCT SPEC —
APPLICATION SPEC —
WEIGHT —

Tyco Electronics
Tyco Electronics Corporation
Harrisburg, PA 17105-3608

AMPLIMITE NONMAGNETIC RECEPTACLE ASSEMBLY, SERIES 90, SHELL SIZE 6, 104 POSITION

SIZE A1 | CAGE CODE 00779 | DRAWING NO C-206065 | RESTRICTED TO —

CUSTOMER DRAWING | SCALE 4:1 | SHEET 1 OF 1 | REV S

AMOS (1/98)

08DEC2008 ua016412 H:\docmgd\206065_1_c.dwg

Downloaded from Elcodis.com electronic components distributor