THIS DRAWING IS UNPUBLISHED. RELEASED FOR PUBLICATION - N/A -
© COPYRIGHT N/A By - ALL RIGHTS RESERVED

LOC	DIST
—	—

REVISIONS

P	LTR	DESCRIPTION	DATE	DWN	APVD
	AA	REV PER ECO 11-008110	6-10-11	CT	RL

1. THIS PLUG WILL MATE WITH ANY RECEPTACLE CONNECTOR WITH THE SAME INSERT ARRANGEMENT AS DEFINED BY MS18277-2.
2. MAXIMUM WIRE INSULATION USED WITH THIS PLUG IS .054 DIA.
3. Be-Cu RETENTION CLIPS ARE INCLUDED IN INSERTS.
4. INSPECTION REQUIREMENTS PER R4383.
5. CONNECTOR SUPPLIED WITH 86 CONTACTS, PART NUMBER 204370-8. INSPECTION REQUIREMENTS PER R4383 WITHOUT TESTS FOR HIGH ALTITUDE DIELECTRIC WITHSTANDING VOLTAGE AS CALLED FOR IN TABLE II SCREENING AND TESTING.
6. UL/CSA DESIGNATION STAMPED IN THIS AREA, OPTIONAL.
7. CONNECTOR LOADED WITH POSTED CONTACTS. INSPECTION REQUIREMENTS PER GENERAL ELECTRIC DOCUMENT 20025720.
8. RESTRICTED TO CAE ELECTRONICS ONLY.
9. THESE CONNECTORS ARE QUALIFIED TO GODDAED SPACE FLIGHT CENTER SPECIFICATION S-311-P-4.
10. CONECTOR LOADED WITH POSTED CONTACTS.
11. SINGLE LOT DATE CODE AND 100% GROUP "A" ACCEPTANCE TESTING PER CI-2A-019.
12. CONNECTOR LOADED WITH POSTED CONTACTS. INSPECTION REQUIREMENTS PER LOCKHEED MARTIN DOC 20131204.
13. PRELIMINARY- NOT RELEASED FOR PRODUCTION

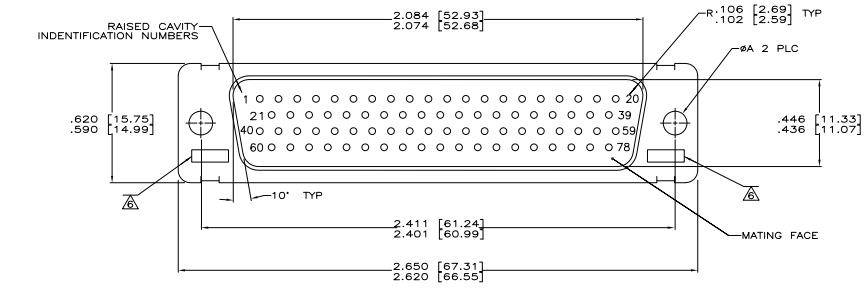

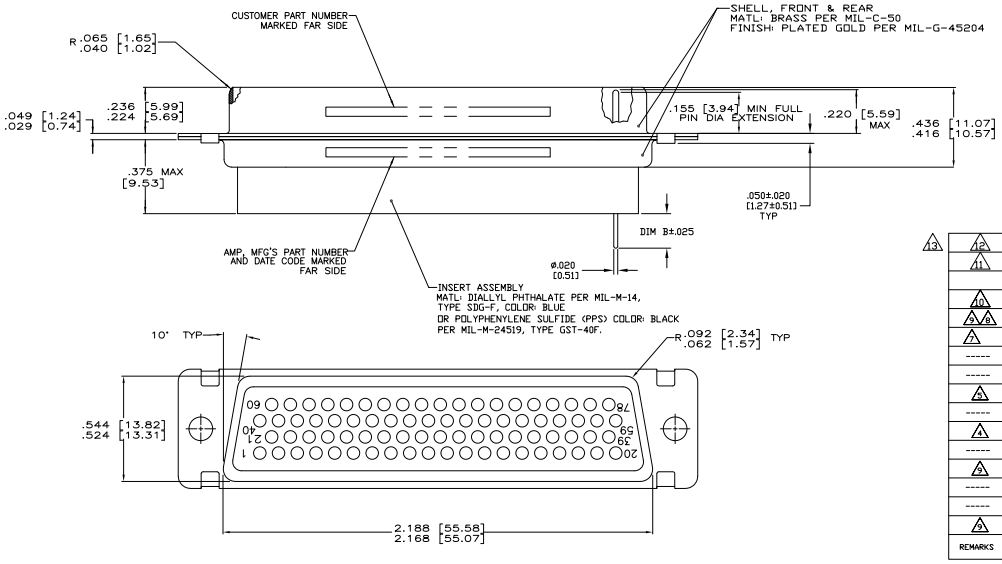

PART NUMBER 204370-8
GSFC PART NUMBER G-08-P1
(SUPPLIED WITH 206504-8 ONLY)

13	12	.150 [3.81]	.120 [3.05]	20131204P2078P	1-206504-6	1-206504-6
	11	--	.120 [3.05]	CI-2A-019-010V-001	1-206504-5	1-206504-5
		--	.120 [3.05]	570566-11	1-206504-4	1-206504-4
	10	.175 [4.45]	.120 [3.05]	-	1-206504-3	1-206504-3
	9, 8	--	.120 [3.05]	311P407-5P-B-12	206504-4	206504-2
	7	.150 [3.81]	.120 [3.05]	20025720P2078P	1-206504-1	1-206504-1
	-----	--	.120 [3.05]	1622251-005	1-206504-0	1-206504-0
	-----	--	.120 [3.05]	7636-9	206504-9	206504-9
	5	--	.120 [3.05]	R4383P78P	206504-8	206504-8
	-----	--	.154 [3.91]	N/A	206504-7	206504-7
	4	--	.120 [3.05]	R4383P78P-2	206504-6	206504-6
	-----	--	.120 [3.05]	SC81D139-055	206504-5	206504-5
	3	--	.120 [3.05]	311P407-5P-B-12	206504-4	206504-4
	-----	--	.154 [3.91]	N/A	206504-3	206504-3
	-----	--	.120 [3.05]	R9259P78P	206504-2	206504-2
	2	--	.154 [3.91]	311P407-5P-B-15	206504-1	206504-1
REMARKS		DIM B	DIM A	CUSTOMER P/N ON CONNECTOR	P/N ON CONNECTOR	PART NUMBER

THIS DRAWING IS A CONTROLLED DOCUMENT.

DIMENSIONS: INCHES [mm]

TOLERANCE UNLESS OTHERWISE SPECIFIED: 0 PLC ± -; 1 PLC ± -; 2 PLC ± -; 3 PLC ± .005 [0.13]; 4 PLC ± -; ANGLES ± 1°

MATERIAL: SEE CALLOUTS

FINISH: SEE CALLOUTS

DR: A.J.GRAFF 12-17-92
CHK: F.KINSEY 1-4-93
APVD: F.KINSEY 1-4-93
PRODUCT SPEC: —
APPLICATION SPEC: —
WEIGHT: —

TE Connectivity

NAME: AMPLIMITE PLUG ASSY,NON-MAGNETIC, SIZE 5,SERIES 90,62 POSN.

SIZE	CAGE CODE	DRAWING NO	RESTRICTED TO
A1	00779	C-206504	—

CUSTOMER DRAWING SCALE 4:1 SHEET 1 OF 1 REV AA

4NGS (3/11)

Downloaded from Elcodis.com electronic components distributor