THIS DRAWING IS UNPUBLISHED. RELEASED FOR PUBLICATION -.-- .
© COPYRIGHT - - BY TYCO ELECTRONICS CORPORATION. ALL RIGHTS RESERVED.

LOC	DIST
DF	DO

REVISIONS

P	LTR	DESCRIPTION	DATE	DRN	APVD
	A	REV PER EC 0H14-0277-05	12JAN06	BL	CCT

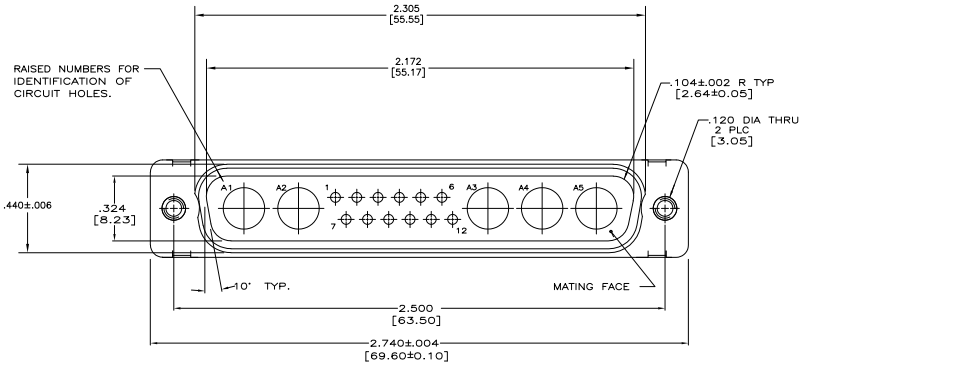

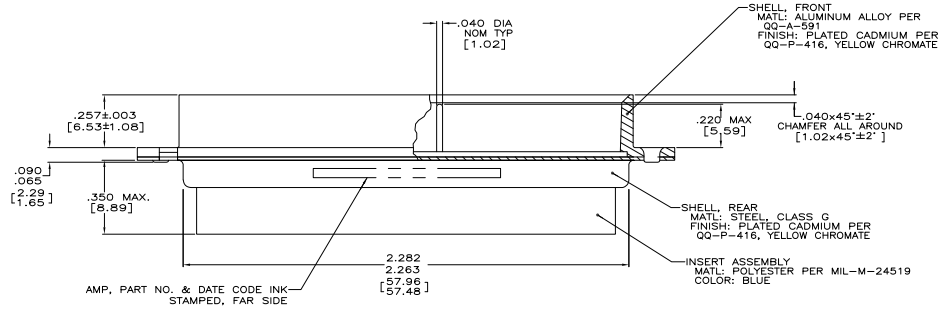

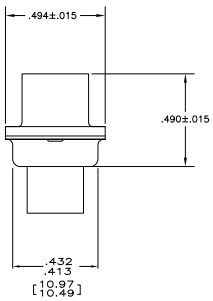

1. THIS PLUG WILL MATE WITH ANY 17C5,SIZE 4 RECEPTACLE IN AMPLIMITE SERIES.
2. SST RETENTION CLIPS ARE INCLUDED IN INSERTS AT POSITIONS 1 THRU 12
3. THIS PLUG IS DESIGNED TO CONFORM TO THE LATEST ISSUE OF MIL-C-24308.
4. CONNECTOR SUPPLIED WITHOUT CONTACTS;SHOWN FOR ILLUSTRATION ONLY
5. POSITION 1 THRU 12 WILL ACCEPT SIZE 20 DM PIN CONTACT M39029/64-369 OR ANY AMP SIZE 20 DF PIN CONTACT

447725-1
PART NUMBER

THIS DRAWING IS A CONTROLLED DOCUMENT.

DIMENSIONS: INCHES
TOLERANCE UNLESS OTHERWISE SPECIFIED
0 PLC ± –
1 PLC ± –
2 PLC ± –.–
3 PLC ± .005
4 PLC ± .005
ANGLES ± –

MATERIAL: SEE CALLOUTS
FINISH: SEE CALLOUTS

DRN P.YEAGER 2-11-91
CHK P.YEAGER 2-18-91
APVD P.YEAGER 2-18-91
PRODUCT SPEC –
APPLICATION SPEC –
WEIGHT –

Tyco Electronics Corporation
Harrisburg, PA 17105-3608

NAME: PLUG ASSEMBLY,AMPLIMITE, 17C5,SIZE 4,COAX MIX BLINDMATE

SIZE A1 CAGE CODE 00779 DRAWING NO C-447725
RESTRICTED TO –
CUSTOMER DRAWING
SCALE 4:1 SHEET 1 OF 1 REV A

AMP 4805 REV 3HWR2000

21MAR2006 11:19am us016412 H:\docmgd\447725_1-c.dwg

Downloaded from Elcodis.com electronic components distributor