THIS DRAWING IS UNPUBLISHED. RELEASED FOR PUBLICATION
© COPYRIGHT BY TYCO ELECTRONICS CORPORATION, ALL RIGHTS RESERVED.

LOC	DIST
DS	

REVISIONS

P	LTR	DESCRIPTION	DATE	DWN	APVD
	A	RELEASED	30.MAR'06	YD.	CS

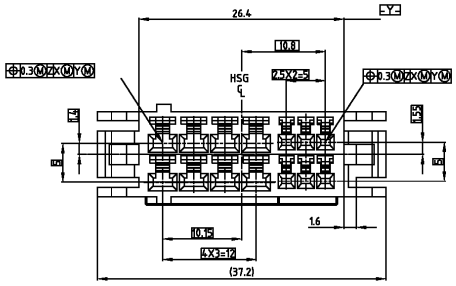

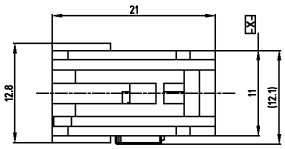

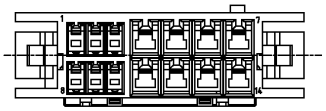

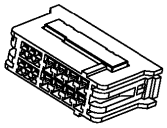

SCALE (1:1)

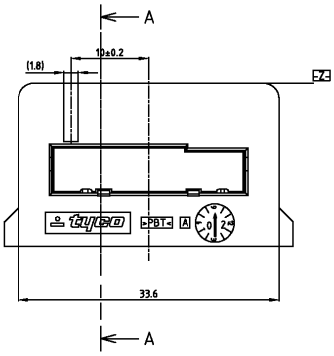

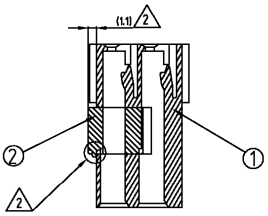

SECTION A-A

NOTES;

1. GENERAL TOLERANCE IS ±0.3
2. CONDITION OF DELIVERY :
   DBL IN 1ST LOCKING POSITION
3. APPLIED RECEPTACLE CONTACT P/N : TABLE 1

ASSEMBLY PART NO. 1743247-1

NO.	COLOR	MATERIAL	DESCRIPTION	P/N	Q'TY
②	NATURAL	PBT	DBL	1743249-1	1
①	NATURAL	PBT	PLUG HSG	1743248-1	1

<REC. TML> <TABLE 1>

TYPE	Part NO.	WIRE SIZE(mm^2)
.040	316836-1	0.3-0.5
.090	368083-1	2.0
	368084-1	0.85-1.25
	368085-1	0.3-0.5

THIS DRAWING IS A CONTROLLED DOCUMENT FOR TYCO ELECTRONICS CORPORATION. IT IS SUBJECT TO CHANGE AND THE CONTROLLING ENGINEERING ORGANIZATION SHOULD BE CONTACTED FOR THE LATEST REVISION.

DIMENSIONS: mm

TOLERANCES UNLESS OTHERWISE SPECIFIED:

3rd ANGLE PROJECTION

MATERIAL: SEE TABLE

FINISH

DWN: YDLEE
CHK: YM CHOI
APVD: JK SONG
PRODUCT SPEC
APPLICATION SPEC
WEIGHT

tyco Electronics
AMP KOREA.
kyungsan, korea

NAME: 040/090III HYBRID 14P PLUG HSG

SIZE: A3 | CAGE CODE: 00779 | DRAWING NO: C- 1743247 | RESTRICTED TO

CUSTOMER DRAWING | SCALE 2/1 | SHEET 1 OF 1 | REV A

AMP 1470-19 REV 31MAR2000

Downloaded from Elcodis.com electronic components distributor