THYRISTOR MODULE

PK(PD,PE)110FG

UL;E76102(M)

Power Thyristor/Diode Module **PK110FG** series are designed for various rectifier circuits and power controls. For your circuit application, following internal connections and wide voltage ratings up to 1600V are available. and electrically isolated mounting base make your mechanical design easy.

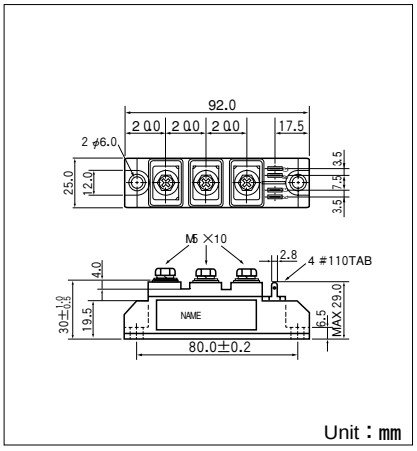

- $I_{T(AV)}$110A, $I_{T(RMS)}$172A, I_{TSM} 3000A
- di/dt 100A/μs
- dv/dt 1000V/μs

(**Applications**)
Various rectifiers
AC/DC motor drives
Heater controls
Light dimmers
Static switches

Internal Configurations

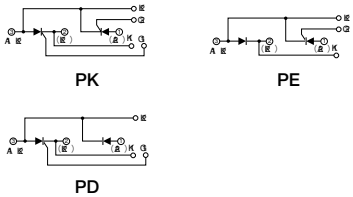

■Maximum Ratings

(Tj=25℃ unless otherwise specified)

Symbol	Item	Ratings				Ratings
		PK110FG40 PD110FG40 PE110FG40	**PK110FG80 PD110FG80 PE110FG80**	**PK110FG120 PD110FG120 PE110FG120**	**PK110FG160 PD110FG160 PE110FG160**	
V_{RRM}	＊Repetitive Peak Reverse Voltage	400	800	1200	1600	V
V_{RSM}	＊Non-Repetitive Peak Reverse Voltage	480	960	1300	1700	V
V_{DRM}	＊Repetitive Peak off-state Voltage	400	800	1200	1600	V

Symbol	Item		Conditions	Ratings	Unit
$I_{T(AV)}$	＊Average On-state Current		Single phase, half wave, 180° conduction, Tc=81℃	110	A
$I_{T(RMS)}$	＊R.M.S. On-state Current		Single phase, half wave, 180° conduction, Tc=81℃	172	A
I_{TSM}	＊Surge On-state Current		½ Cycle, 50/60Hz, Peak Value, non-repetitive	2740/3000	A
I^2t	＊I^2t		Value for one cycle surge current	37500	A^2S
P_{GM}	Peak Gate Power Dissipation			10	W
$P_{G(AV)}$	Average Gate Power Dissipation			1	W
I_{FGM}	Peak Gate Current			3	A
V_{FGM}	Peak Gate Voltage (Forward)			10	V
V_{RGM}	Peak Gate Voltage (Reverse)			5	V
di/dt	Critical Rate of Rise of On-state Current		I_G=100mA, V_D=½V_{DRM}, di_G/dt=0.1A/μs	100	A/μs
V_{ISO}	＊Isolation Breakdown Voltage (R.M.S.)		A.C. 1minute	2500	V
Tj	＊Operating Junction Temperature			−40 t ＋125	℃
Tstg	＊Storage Temperature			−40 t ＋125	℃
	Mounting Torque	Mounting (M5)	Recommended Value 1.5-2.5 (15-25)	2.7 (28)	N·m (kgf·cm)
		Terminal (M5)	Recommended Value 1.5-2.5 (15-25)	2.7 (28)	
	Mass		Typical Value	170	g

■Electrical Characteristics

Symbol	Item	Conditions	Ratings	Unit
I_{DRM}	Repetitive Peak off-state Current,max	Tj=125℃, V_D=V_{DRM}	30	mA
I_{RRM}	＊Repetitive Peak Reverse Current,max	Tj=125℃, V_D=V_{DRM}	30	mA
V_{TM}	＊On-state Voltage,max	I_T=330A	1.6	V
I_{GT}	Gate Trigger Current,max	V_D=6V, I_T=1A	50	mA
V_{GT}	Gate Trigger Voltage,max	V_D=6V, I_T=1A	3	V
V_{GD}	Gate Non-Trigger Voltage,min	Tj=125℃, V_D=½V_{DRM}	0.25	V
dv/dt	Critical Rate of Rise of off-state Voltage,min	Tj=125℃, V_D=⅔V_{DRM}	1000	V/μs
Rth(j-c)	＊Thermal Impedance,max	Junction to case	0.25	℃/W

＊mark : Thyristor and Diode part. No mark : Thyristor part

SanRex 50 Seaview Blvd. Port Washington, NY 11050-4618 PH.(516)625-1313 FAX(516)625-8845 E-mail: semi@sanrex.com

Downloaded from Elcodis.com electronic components distributor

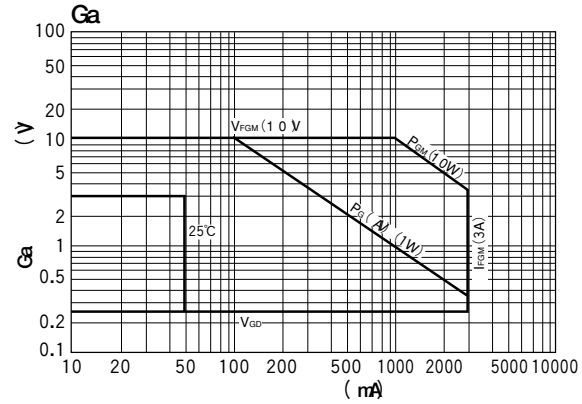

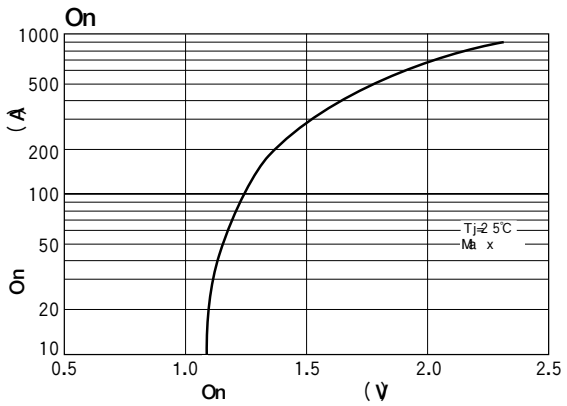

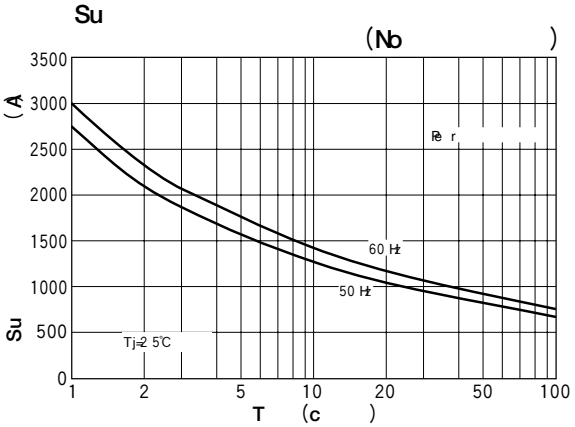

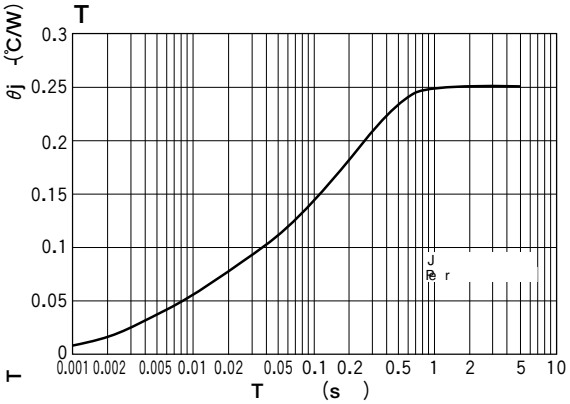

Downloaded from Elcodis.com electronic components distributor