Integrated Infrared Transceiver Module IrDA (SIR)

Description

The TFDS3000 is an infrared transceiver for data communication systems. The transceiver is compatible to the IrDA standard which allows data rates up to 115 kB/s.

An internal AGC (**A**utomatic **G**ain **C**ontrol) ensures proper operation under EMI conditions.

Features

- Compatible to IrDA standard
- SMD side view
- Low profile (height = 5.6 mm max.)
- Microcomputer compatible
- No external components
- Low power consumption
- Wide supply voltage range (3 to 5.5 V)
- AGC for EMI immunity

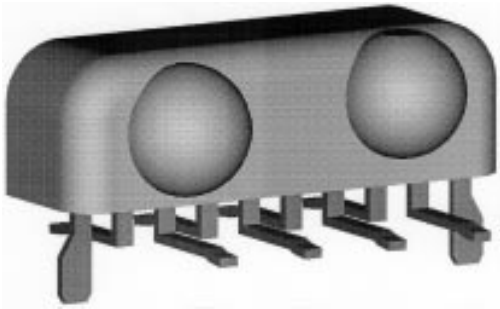

Pin description:

1: IRED cathode
2: Rxd (output)
3: V_{CC} (supply voltage)
4: Ground
5: NC *)
6: **)
7: Txd (input)
8: IRED anode
Guide pins internally connected to ground

*) optional sensitivity control for OEMs only
**) shut-down, not for new development

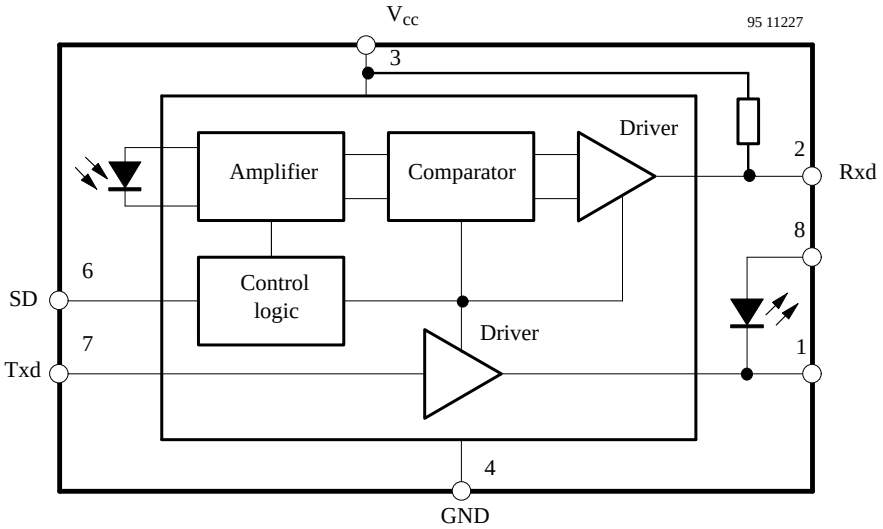

Figure 1. Block diagram

Absolute Maximum Ratings

Reference point Pin 4, unless otherwise specified

Parameter	Test Conditions	Symbol	Value	Unit
Supply voltage range		V_{CC}	–0.5 to 6	V
Input currents	All pins, exept 8:see IRED		10	mA
Output sinking current			25	mA
Power dissipation	See figure 3	P_{tot}	200	mW
Junction temperature		T_j	125	°C
Ambient temperature range (operating)		T_{amb}	0 to70	°C
Storage temperature range		T_{stg}	–25 to +85	°C
Soldering temperature	See figure 11 introductory text IrDA Design Guide		230 (typ. 215)	°C
Average IRED current		I_{IRED}(DC)	100	mA
Repetitive pulsed IRED current	< 90 µs, t_{on} < 20%	I_{IRED}(RP)	500	mA
Peak IRED current	< 2 µs, t_{on} < 10%	I_{IRED}(PK)	1	A
IRED anode voltage		V_{IREDA}	–0.5 to V_{CC} +0.5	V
Transmitter data input voltage		V_{Txd}	–0.5 to V_{CC} +0.5	V
Receiver data output voltage		V_{Rxd}	–0.5 to V_{CC} +0.5	V

Basic Characteristics

T_{amb} = 25°C, V_{CC} = 5 V, unless otherwise specified

Parameter	Test Conditions	Symbol	Min.	Typ.	Max.	Unit
Transceiver						
Supported data rates			2.4		115.2	kBit/s
Supply voltage range reduced function down to 2.6 V		V_{CC}	3	5	5.5	V
Supply current		I_S		1.3	2.5	mA
Receiver						
Min. detection threshold irradiance **)	α = ±15°	E_{emin}		0.025	0.035	W/m²
Max. detection threshold irradiance **)	α = ±90°	E_{emax}	3300	5000		W/m²
Logic low receiver input irradiance		$E_{emaxlow}$			0.004	W/m²
Max. DC irradiance	α = ±90°	E_{edcmax}	400			W/m²
Output voltage Rxd	Active, C = 15 pF, R = 2.2 kΩ	V_{OL}		0.5	0.8	V
Output voltage Rxd	Non-active, C = 15 pF, R = 2.2 kΩ	V_{OH}	V_{CC}–0.5			V
Output current	V_{OL} < 0.5 V C = 15 pF, R = 2.2 kΩ			4		mA
Rise and fall time	C = 15 pF, R = 2.2 kΩ	t_r, t_f	20		200	ns
Rxd signal, electrical output pulse width	2.4 kB/s		1		20	µs
Rxd signal, electrical output pulse width	115.2 kB/s		1		8	µs

**) BER = 10^{-8} is target of IrDA specification, defined sensitivities not related to BER = 10^{-8}

Parameter	Test Conditions	Symbol	Min.	Typ.	Max.	Unit
Output delay time (Rxd) Max. delay of leading edge of output signal related to leading edge of optical input signal	Output level = 0.5 × V_{CC} @ E_e = 0.040 W/m^2			1	2	µs
Jitter, leading edge of output signal	Over a period of 10 bit, 115.2 kB/s				2	µs
Output delay time (Rxd) Max. delay of trailing edge of output signal related to trailing edge of optical input signal	Output level = 0.5 × V_{CC}				6.5	µs
Latency	Recovery from last transmitted pulse to 1.1 × threshold sensitivity	t_L		100	800	µs
Transmitter						
Supply voltage switching specs only cover 4.5 to 5.5 V		V_{CC}	3		5.5	V
Driver Current IRED I_d can be adjusted by variation of R_S	Current limiting resistor in series to IRED: R_S = 10 Ω @ 5 V	I_d		0.3	0.5	A
Logic low transmitter input voltage		V_{IL}(Txd)	0		0.8	V
Logic high transmitter input voltage	Max. input current I_{in} < 100 µA	V_{IH}(Txd)	2.4		V_{CC}	V
Output radiant intensity α = ±15°	Current limiting resistor in series to IRED: R_S = 10 Ω, V_{CC} = 5 V		40	60	200	mW/sr
Angle of half intensity		α		±24		°
Peak wavelength of emission		λ_p	850	870	900	nm
Halfwidth of emission spectrum				60		nm
Optical rise / fall time	115.2 kHz square wave signal (1:1)			200	600	ns
Output radiant intensity	Logic LOW level				0.4	µW/sr
Overshoot, optical					25	%
Rising edge peak-to-peak jitter	Over a period of 10 bits, independent of information content	t_j			0.2	µs

Recommended SMD Soldering Pads for TFDS3000
Dimensions in mm

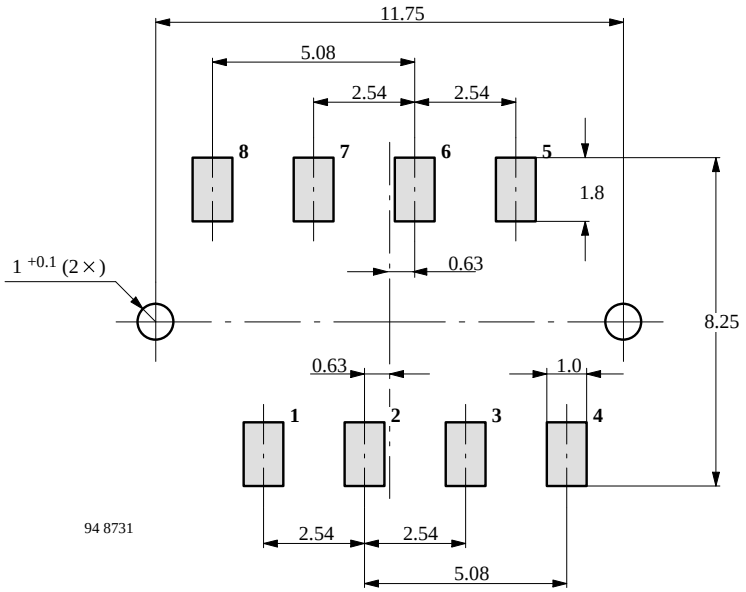

Figure 2.

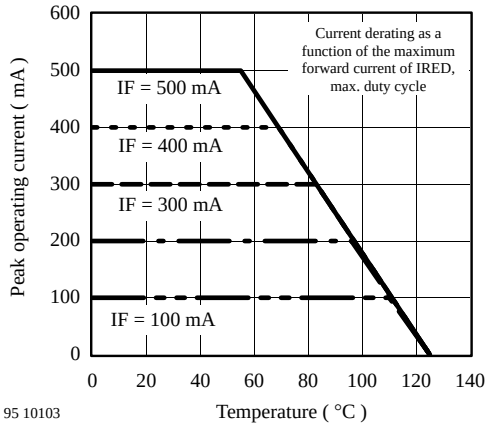

Figure 3. Current derating as a function of ambient temperature, condition: duty cycle ≤20%

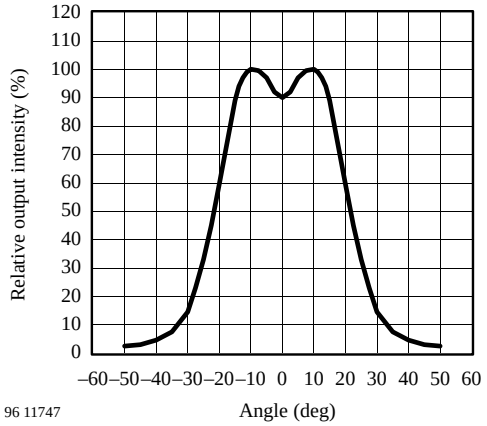

Figure 4.

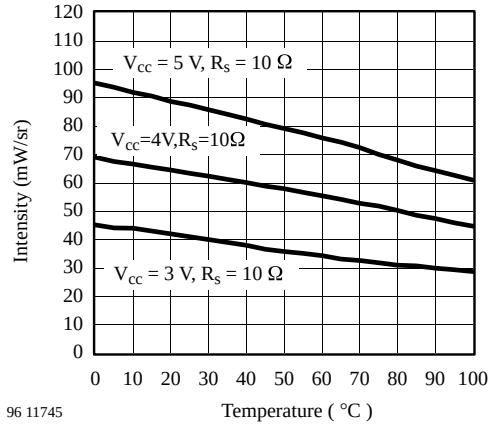

Figure 6.

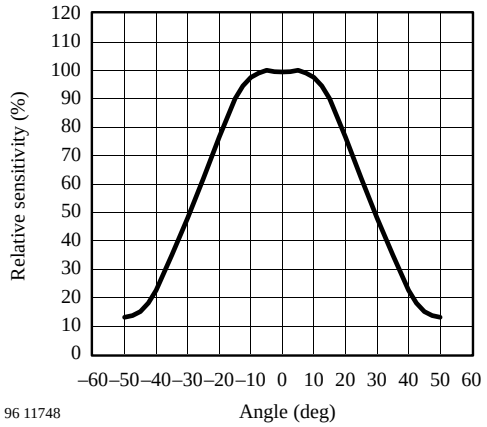

Figure 5.

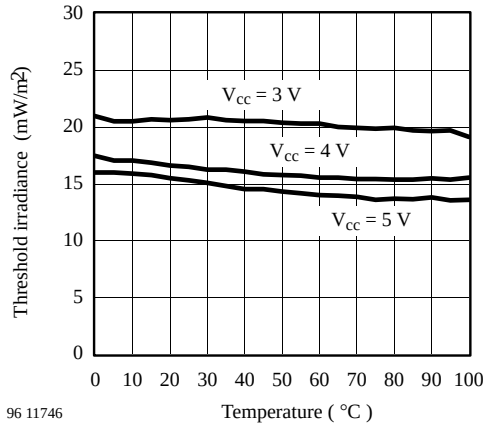

Figure 7.

TFDS3000 Recommended Circuit Diagram

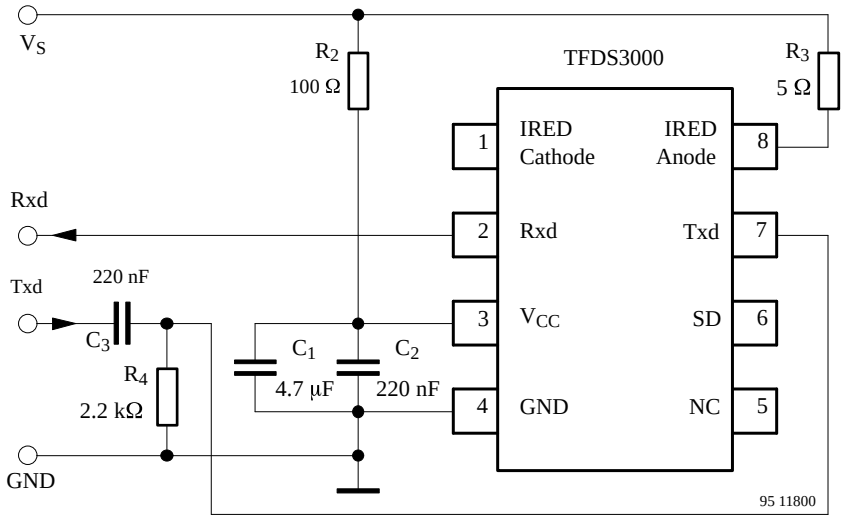

Figure 8.

Txd is recommended to be dc-coupled to the driving circuitry. R4 and C3 are only necessary if the input signal is active for longer periods. This might occur under certain conditions when the circuit is conncted to the NSC or SMC Super I/OsTM. See National Semiconductors application note.

R3 is used for controlling the current through the IR emitter. To increase the output power, reduce the value. To reduce the output power, increase the value as described in the TEMIC IrDA Design Guide.

The load resistor R1 is optional when longer cables must be driven. Internally, RxD is connected to V_{CC} by a 20 kΩ load.

C1 and C2 are dependent on the quality of the supply voltage. A combination of 6.8 µF with 100 nF will also work in most cases.

Pin	Pin Name	Description	I/O	Active
1	IRED cathode	IRED cathode, internally connected to driver transistor		
2	Rxd	Received data	O	LOW
3	Vcc	Supply voltage		
4	GND	Ground		
5	NC	No connection		
6	NC	No connection		
7	Txd	Data to be transmitted	I	HIGH
8	IRED anode	IRED anode		
–	2 guide pins	Internally connected to ground		

Shape and Dimensions of Reel

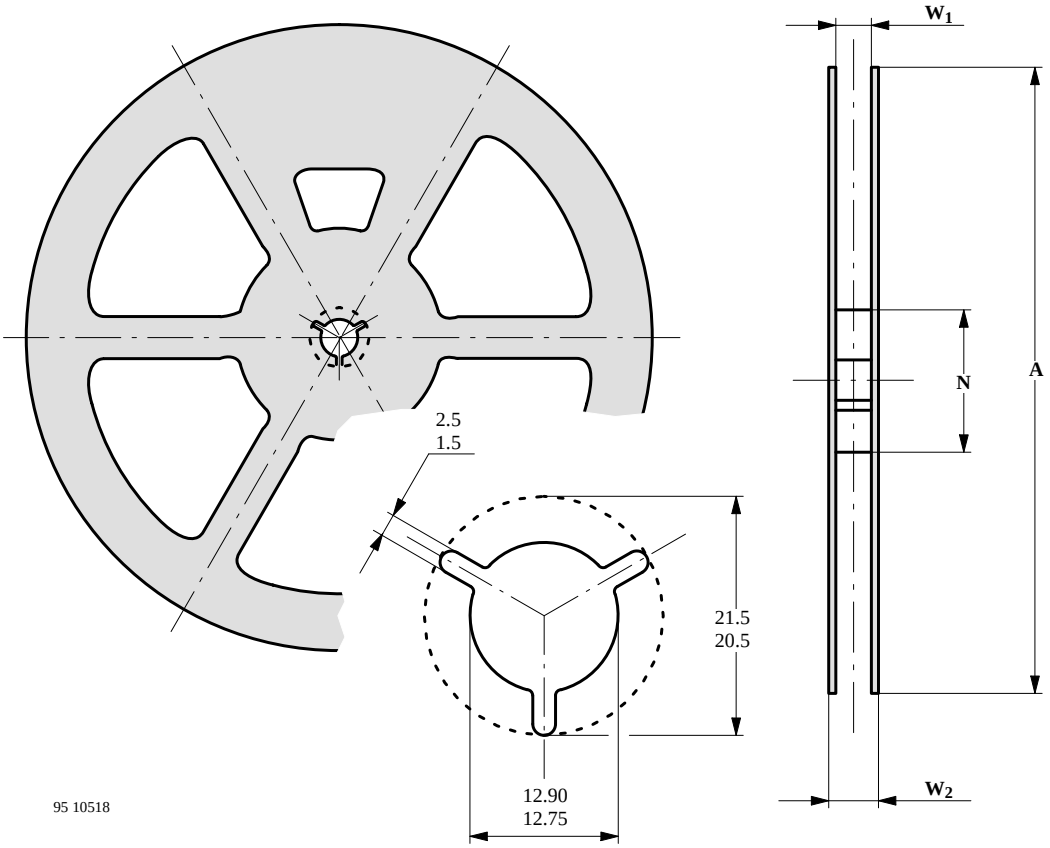

Figure 9. Shape and dimensions of reel

TFDS3000

Version	Tape Width “W”	A	N	W_1	$W_{2\ max}$
C1	24 ± 1	330 ± 1	100 ± 1.5	24.4 (+2/–0)	30.4

Dimensions of Tape

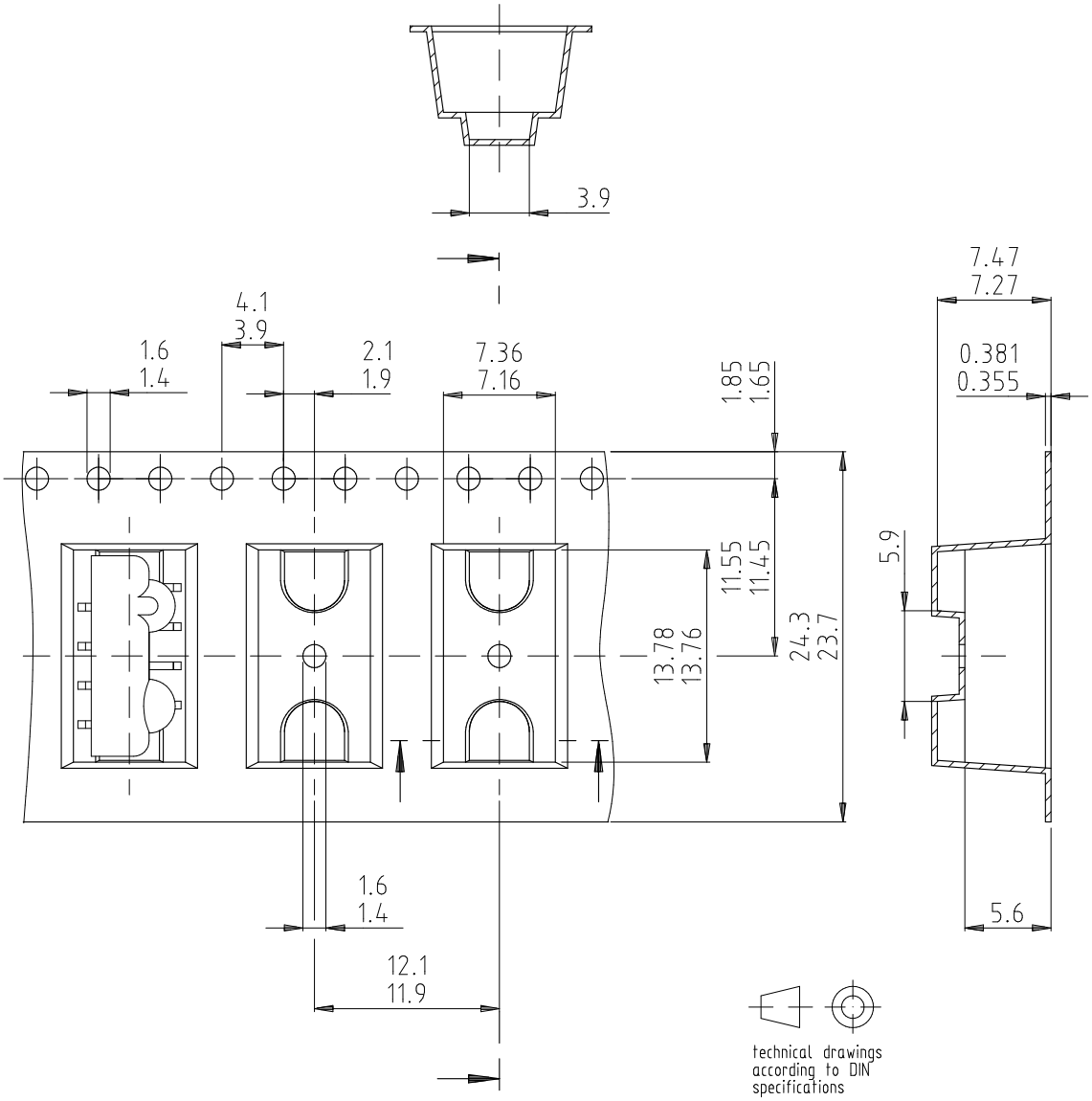

Drawing refers to following types: Tape TFDS 2000
TFDS 3000
TFDS 4000
TFDS 6000

12402

Figure 10. Dimensions of tape TFDS3000

Dimensions in mm

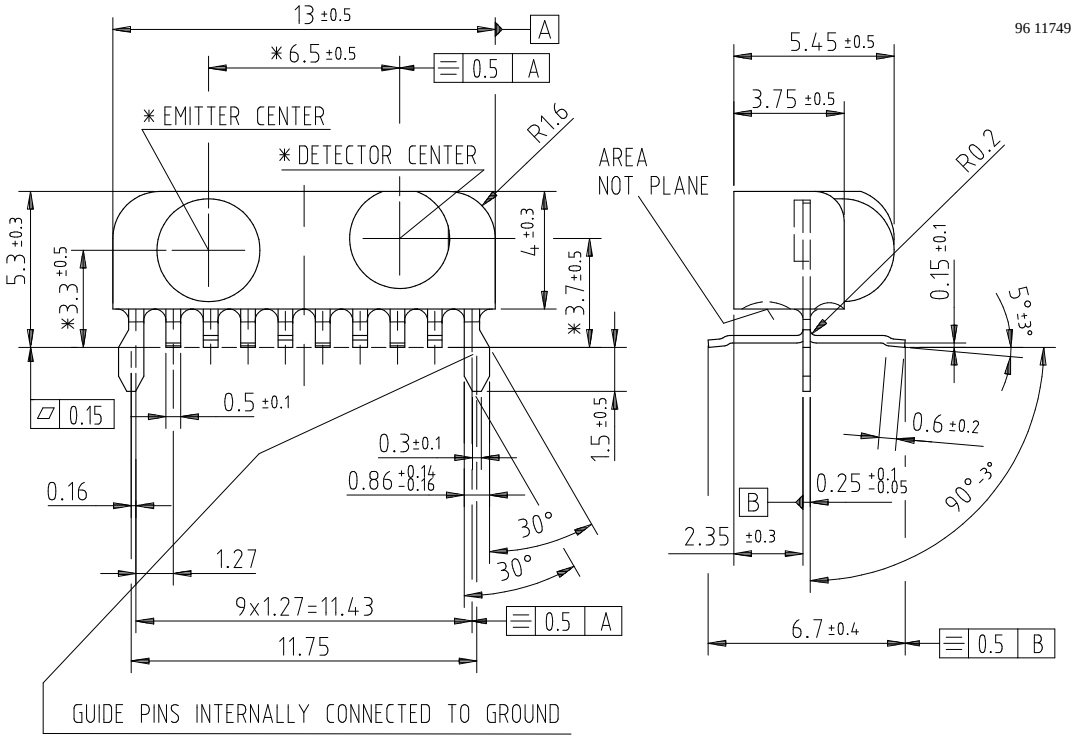

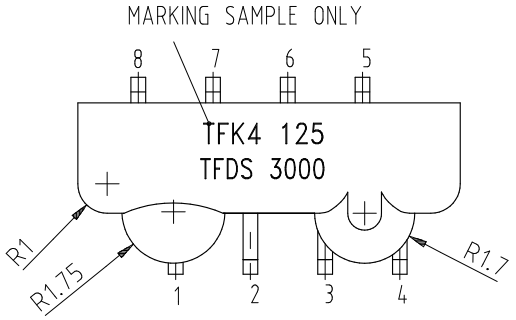

Ozone Depleting Substances Policy Statement

It is the policy of **TEMIC TELEFUNKEN microelectronic GmbH** to

1. Meet all present and future national and international statutory requirements.

2. Regularly and continuously improve the performance of our products, processes, distribution and operating systems with respect to their impact on the health and safety of our employees and the public, as well as their impact on the environment.

It is particular concern to control or eliminate releases of those substances into the atmosphere which are known as ozone depleting substances (ODSs).

The Montreal Protocol (1987) and its London Amendments (1990) intend to severely restrict the use of ODSs and forbid their use within the next ten years. Various national and international initiatives are pressing for an earlier ban on these substances.

TEMIC TELEFUNKEN microelectronic GmbH semiconductor division has been able to use its policy of continuous improvements to eliminate the use of ODSs listed in the following documents.

1. Annex A, B and list of transitional substances of the Montreal Protocol and the London Amendments respectively

2. Class I and II ozone depleting substances in the Clean Air Act Amendments of 1990 by the Environmental Protection Agency (EPA) in the USA

3. Council Decision 88/540/EEC and 91/690/EEC Annex A, B and C (transitional substances) respectively.

TEMIC can certify that our semiconductors are not manufactured with ozone depleting substances and do not contain such substances.

TEMIC TELEFUNKEN microelectronic GmbH, P.O.B. 3535, D-74025 Heilbronn, Germany
Telephone: 49 (0)7131 67 2831, Fax number: 49 (0)7131 67 2423