Timer Control for Triac and Relay

U2100B

Features

- Adjustable and Retriggerable Tracking Time
- Window Monitoring for Sensor Input
- Enable Input for Triggering
- Internal Noise Suppression (40 ms) and Retrigger Blocking (640 ms)
- Two- or Three-wire Applications

Applications

- Motion Detectors
- Touch Sensors
- Timers

1. Description

The timer control circuit U2100B uses bipolar technology. It has different mode selections (zero voltage switch, phase control and relay control). The output stage is triggered according to input conditions. It can be used in triac application for two- or three-wire systems as a power switch.

Rev. 4769C–INDCO–07/05

Figure 1-1. Block Diagram with External Circuit

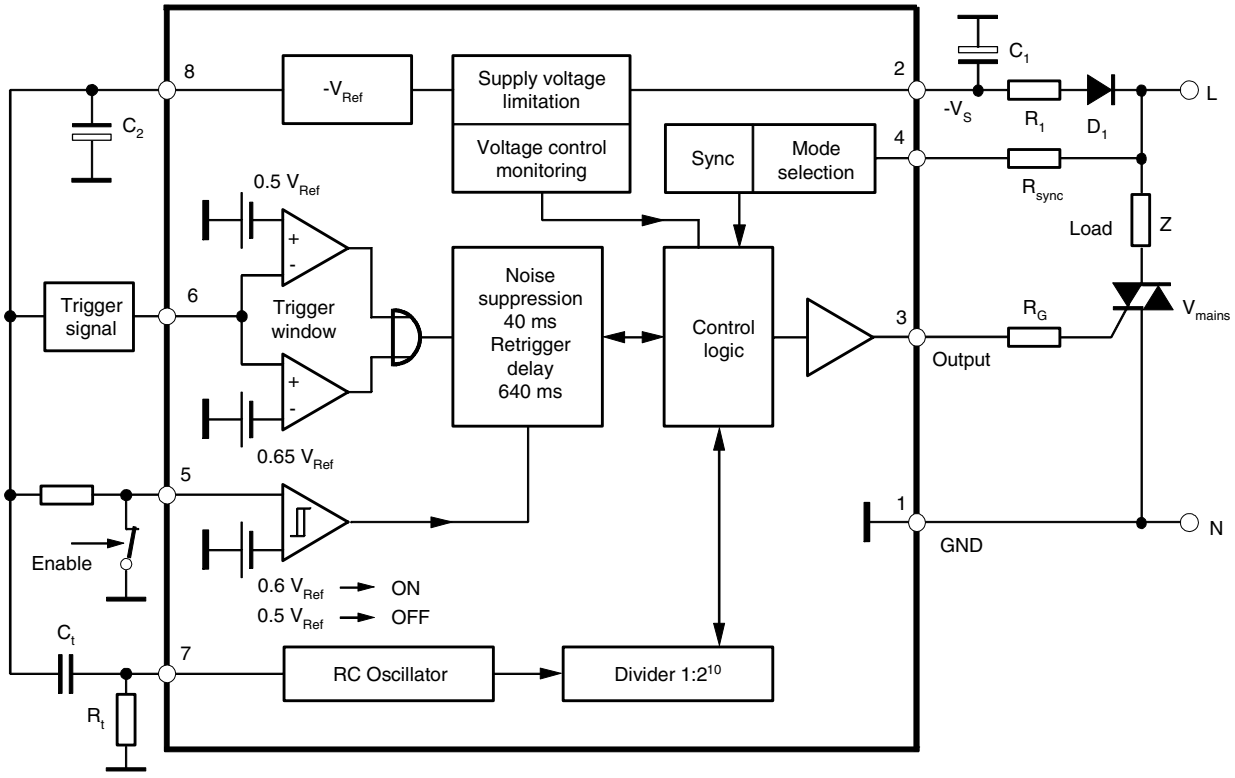

2. Pin Configuration

Figure 2-1. Pinning DIP8/SO8

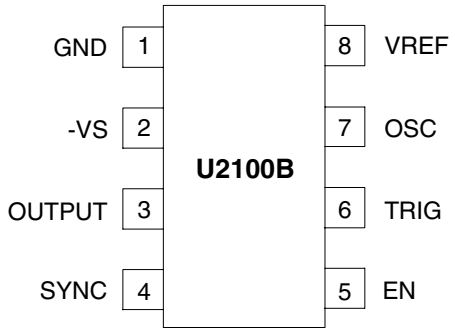

Table 2-1. Pin Description

Pin	Symbol	Function
1	GND	Reference point
2	–VS	Supply voltage
3	OUTPUT	Driver output
4	SYNC	Synchronization and mode selection
5	EN	Enable
6	TRIG	Input trigger signal
7	OSC	RC oscillator
8	VREF	Reference voltage

3. General Description

The monostable integrated power-control circuit U2100B can be used according to the mode selection in relay or triac applications. In addition, it can be used in triac applications for two-wire systems as power switch (the load in series to the switch), where the supply voltage for the control unit is gained from the remaining phase angle (α_{min} operation).

Figure 3-1. Two-wire Circuit

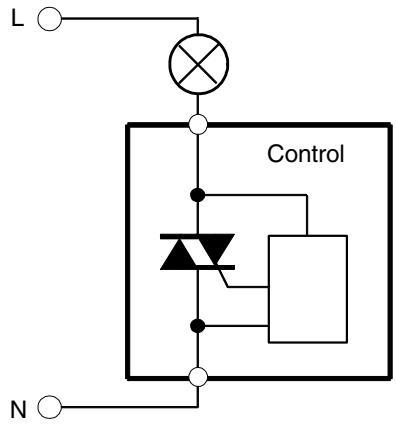

Figure 3-2. Three-wire Circuit

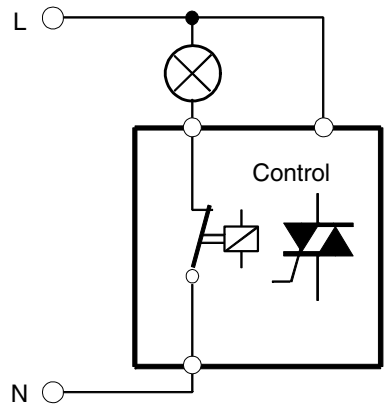

For three-wire switch systems, two operational modes are possible:

- Zero voltage switch operation for triac control
- Static operation for relay control

3.1 Mode Selection Pin 4 and Supply Voltage Pin 2

The operational modes can be selected by the external voltage at the synchronous input pin 4 (clamping). The mode selection determines the current requirement of the relay's or triac's driver stage and hence the selection of the supply voltage.

3.2 Zero Voltage Switch Operation (Figure 3-3 on page 6)

Selection condition:

V_4 = internal synchronous limitation, without external clamping

$$R_1 \approx 0.85 \frac{V_M - V_S}{2\, I_{tot}}$$

$$I_{tot} = I_S + I_p + I_X$$

where:

I_S	= Supply current of the IC without load
I_P	= Average trigger current I_G
I_X	= External circuit current requirement
V_M	= Mains voltage

Required firing pulse width t_p

$$t_p = \frac{2}{\omega} \arcsin\left(\frac{I_L \times V_M}{P \times \sqrt{2}}\right)$$

where:

I_L	= Triac latching current
P	= Power at load Z

$$R_{sync}[k\Omega] \approx \frac{V_M[V] \times \sqrt{2} \sin\left(\omega \times t_p[s]\right) - 0.7}{1.8 \times 10^{-2}} - 176$$

Figure 3-3. Zero Voltage Switch Operation

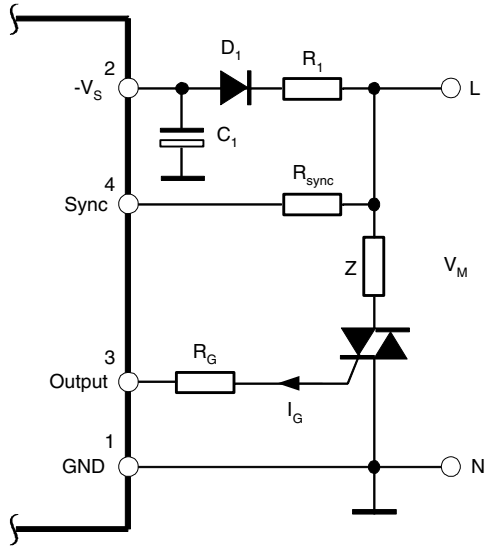

3.3 DC Operation

Selection condition (Figure 3-4):

$+V_4 = 6.1V$, $-V_4$ = internal limitation where:

$R_0 \approx 1/10\ X_c$

$$X_c = 0.85\frac{V_M - V_S}{I_{tot}}$$

$I_{tot} = I_S + I_{Rel} + I_X$

$$C_0 = \frac{1}{\omega \times X_C}$$

Figure 3-4. DC Operation

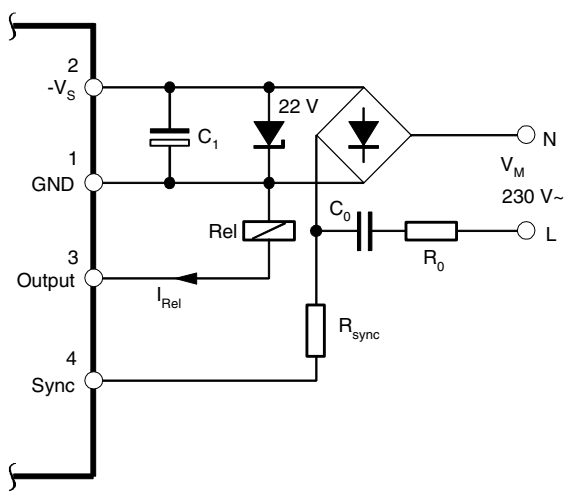

3.4 α_{min} Operation

Selection condition (Figure 3-5):

$-V_4$ = 6.5 to 7.8V, $+V_4$ = internal limitation

$$R_{\alpha max} = R_{sync} \frac{3.6\ V}{V_{R(peak)} - 3.6\ V}$$

$$R_{\alpha min} = R_{sync} \frac{10\ V}{V_M \times \sqrt{2} - 10\ V}$$

$V_{R(peak)}$ is the peak voltage of the remaining phase angle, which should be high enough to generate the supply voltage, V_S.

Figure 3-5. α_{min} Operation (Two-wire Operation)

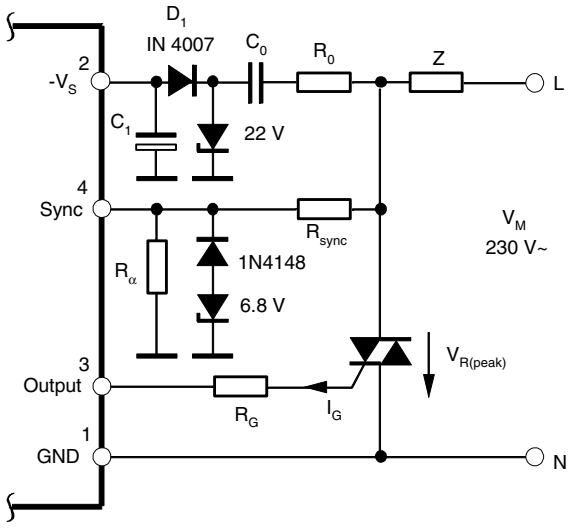

C_1	=	100 µF/35V
C_o	=	0.33 µF/250V ~
R_o	=	390Ω
R_{sync}	=	220 kΩ
R_α	=	10 kΩ
R_G	=	390Ω
D_1	=	IN 4007

3.5 Tracking Time Pin 7

An internal RC oscillator with a following divider stage $1:2^{10}$ allows a very long and reproducible tracking time.

The RC values for the required final time, t_t, can be calculated as follows:

$$R_t[\Omega] = \frac{t_t[s] \times 10^6}{1.6 \times 1024 \times C_t[\mu F]}$$

$$C_t[\mu F] = \frac{t_t[s] \times 10^6}{1.6 \times 1024 \times R_t[\Omega]}$$

$$t_t[s] = \frac{C_t[\mu F] \times R_t[\Omega] \times 1.6 \times 1024}{10^6}$$

3.6 Trigger Inputs Pins 5 and 6

Two AND-connected, identical inputs determine the trigger conditions of the monostable time stages (Figure 3-6, Figure 3-7 on page 9), i.e., both inputs must be in position “ON” so that the output is switched on. The tracking time starts after the trigger conditions have elapsed. The output ON state is given until the tracking time has elapsed.

Input pin 5 is a simple comparator, whereas input pin 6 is designed as a window discriminator.

The noise suppression for t_{ON} = 40 ms prevents peak noise signals at the inputs which could trigger the circuit.

At the same time, the retrigger function is delayed for a duration of 640 ms (t_{OFF}) to avoid noise signal that may trigger the relay.

Figure 3-6. Trigger Condition, Pin 5

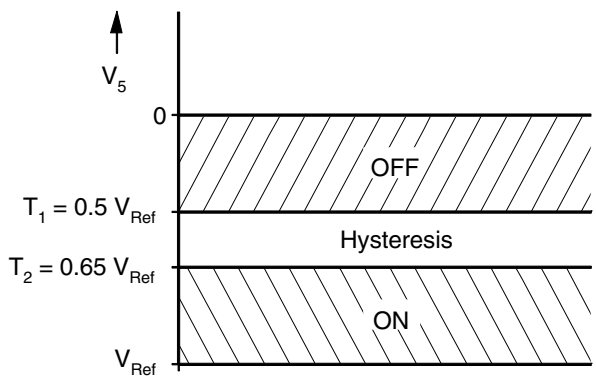

Figure 3-7. Trigger Condition, Pin 6

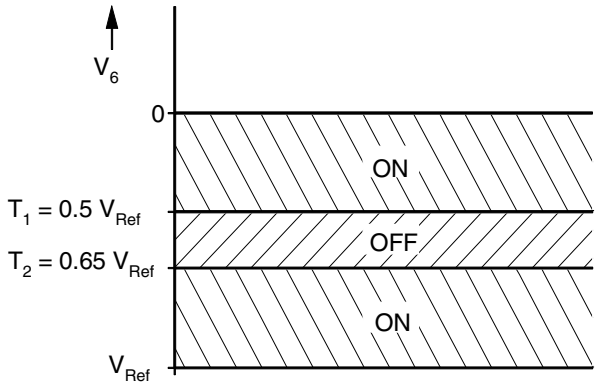

4. Absolute Maximum Ratings

Stresses beyond those listed under “Absolute Maximum Ratings” may cause permanent damage to the device. This is a stress rating only and functional operation of the device at these or any other conditions beyond those indicated in the operational sections of this specification is not implied. Exposure to absolute maximum rating conditions for extended periods may affect device reliability.

Parameters	Pin	Symbol	Value	Unit
Supply	2			
Supply current Peak current t ≤10 ms		$-I_S$ $-i_s$	10 60	mA mA
Supply voltage		$-V_S$	32	V
Reference voltage source Output current	8	I_O	3	mA
Synchronization Input current t ≤10 ms	4	$\pm I_{Sync.}$ $i_{Sync.}$	5 20	mA mA
Window Monitoring				
Input voltage	6	$-V_1$	V_{Ref} to 0	V
Enable Schmitt Trigger	5			
Input voltage		$-V_1$	V_{Ref} to 0	V
Driver Output	3			
Collector voltage		$-V_o$	V_S to 2	V
Storage temperature range		T_{stg}	–40 to +125	°C
Junction temperature		T_j	125	°C
Ambient temperature range		T_{amb}	0 to 100	°C

5. Thermal Resistance

Parameters		Symbol	Value	Unit
Junction ambient	DIP8	R_{thJA}	110	K/W
	SO8 on PC board	R_{thJA}	220	K/W
	SO8 on ceramic	R_{thJA}	140	K/W

6. Electrical Characteristics

V_S = –18V, T_{amb} = 25°C, reference point pin 1, unless otherwise specified.

Parameters	Test Conditions	Pin	Symbol	Min.	Typ.	Max.	Unit
Supply-voltage limitation	I_S = 800 µA I_S = 2 mA	2	$-V_S$ $-V_S$	21 21.3		23 24	V V
Current consumption	I_3 = 0		$-I_S$			750	µA
Supply-voltage Monitoring		2					
ON-threshold			$-V_S$		15		V
OFF-threshold			$-V_S$		6.5		V
Reference voltage	I_8 = 0.1 mA I_8 = 1.5 mA	8	$-V_{Ref}$ $-V_{Ref}$	4.95 4.75		5.45 5.45	V V
Synchronization		4					
Input current			$\pm i_{sync}$	0.1		1.1	mA
Voltage limitation	I_4 = ±1 mA		$\pm V_{sync}$	8.8	9.4	10	V
Remaining phase angle α_{min} threshold	ON Off		$\pm V_T$ $\pm V_T$	3.6 1.8	4 2	4.4 2.2	V V
Zero identification		4					
Zero identification	ON OFF		$\pm V_T$ $\pm I_T$ $\pm V_T$ $\pm I_T$		1.5 8.5 4 20		V µA V µA
Operation Selection		4					
Zero voltage switch			$\pm V_{sync}$		V_4 limit		
α_{min} operation			$+V_{sync}$ $-V_{sync}$		V_4 limit 6.5 to 7.8		V V
DC mode			$-V_{sync}$ $+V_{sync}$		V_4 limit 6.5 to 7.8		V V
Window Monitoring, Figure 3-7 on page 9		6					
Threshold 1			$-V_I/V_{Ref}$	0.52	0.49	0.46	
Threshold 2			$-V_I/V_{Ref}$	0.67	0.65	0.63	
Enable Schmitt Trigger, Figure 3-6 on page 8		5					
Threshold 1	OFF		$-V_I/V_{Ref}$	0.33	0.3	0.27	
Threshold 2	ON		$-V_I/V_{Ref}$	0.62	0.6	0.58	
Oscillator	$f = \frac{1}{1.6 \times R_t \times C_t}$	5					
Threshold 1	7 - 1		V_I/V_{Ref}	0.25	0.20	0.15	
Threshold 2	7 - 8		V_I		100	200	mV
Input current	7		I_I		100	500	nA
Output Stage		3					
Saturation voltage	I_3 = 100 mA		V_{3-2}			2	V
Output current			I_3	100			mA

7. Applications

Figure 7-1. Lamp Time Control 18 Seconds to 23 Minutes for Two-wire Systems

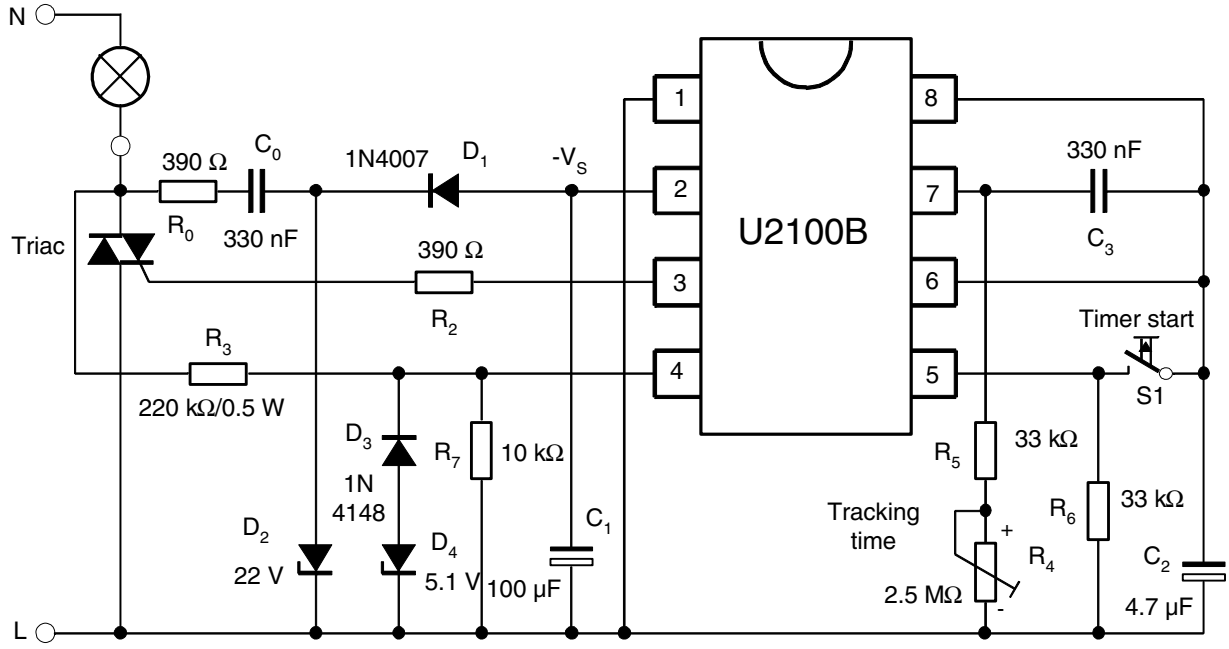

Figure 7-2. Fan Tracking Time Control 18 Seconds to 23 Minutes

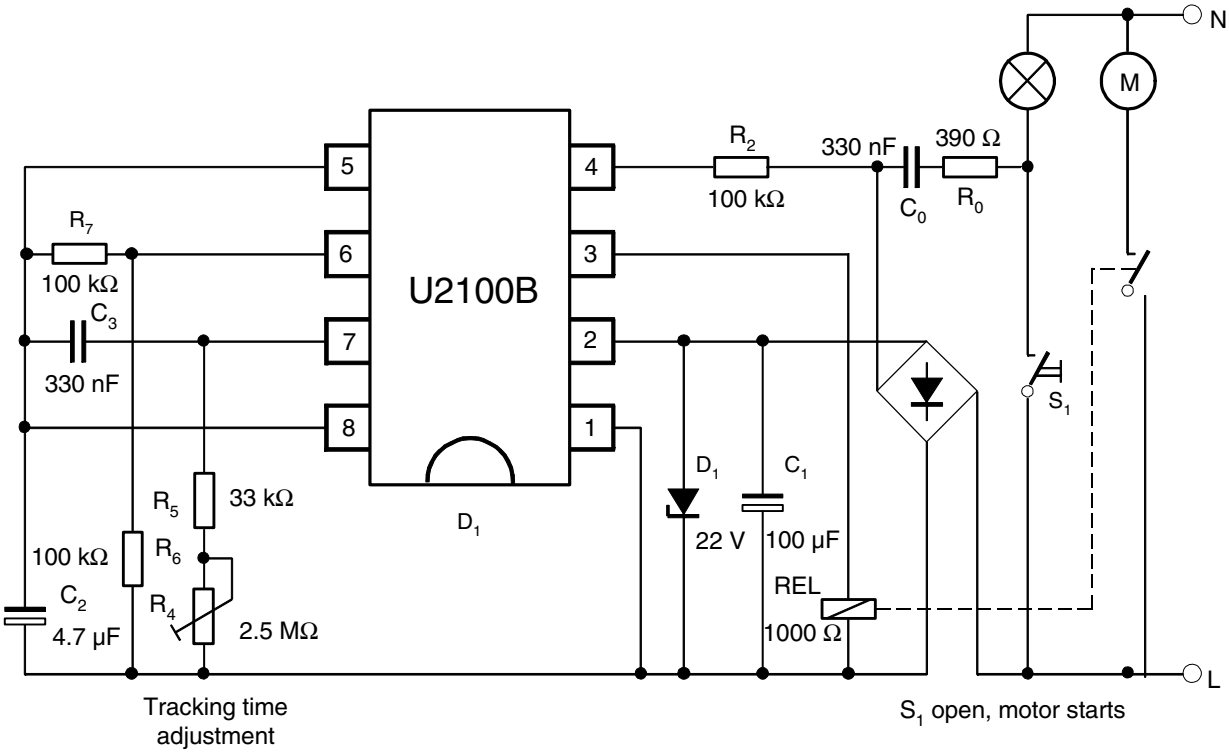

8. Ordering Information

Extended Type Number	Package	Remarks
U2100B-xY	DIP8	Tube
U2100B-xFPY	SO8	Tube
U2100B-xFPG3Y	SO8	Taped and reeled

9. Package Information

Package DIP8

Dimensions in mm

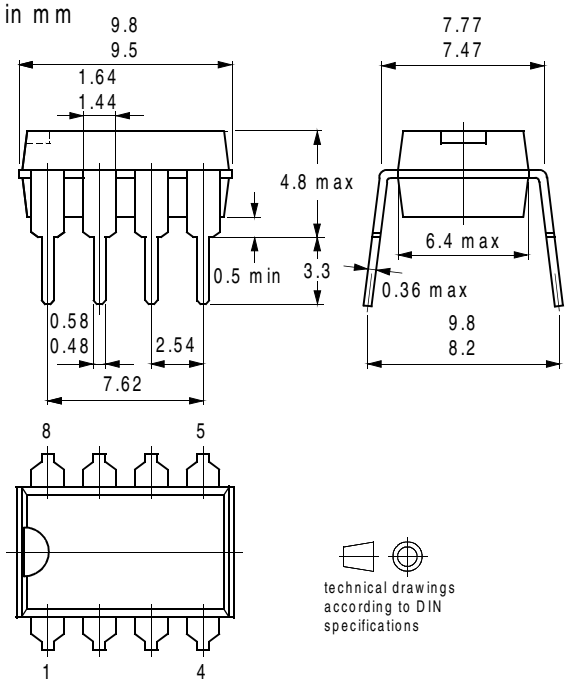

Package SO8

Dimensions in mm

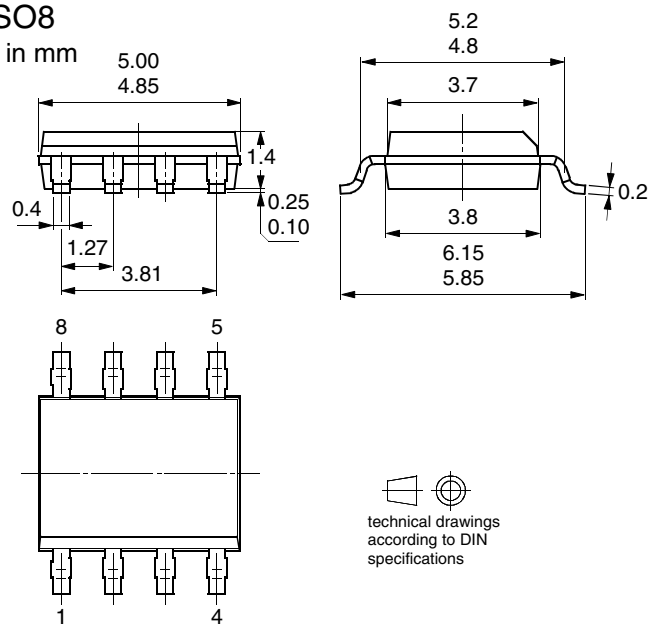

10. Revision History

Please note that the following page numbers referred to in this section refer to the specific revision mentioned, not to this document.

Revision No.	History
4769C-INDCO-07/05	• Put datasheet in a new template • Section 3.5 “Tracking Time Pin 7” on page 8 changed
4769B-INDCO-12/04	• Put datasheet in a new template • Table “Electrical Characteristics” on page 9 changed

Atmel Corporation

2325 Orchard Parkway
San Jose, CA 95131, USA
Tel: 1(408) 441-0311
Fax: 1(408) 487-2600

Regional Headquarters

Europe
Atmel Sarl
Route des Arsenaux 41
Case Postale 80
CH-1705 Fribourg
Switzerland
Tel: (41) 26-426-5555
Fax: (41) 26-426-5500

Asia
Room 1219
Chinachem Golden Plaza
77 Mody Road Tsimshatsui
East Kowloon
Hong Kong
Tel: (852) 2721-9778
Fax: (852) 2722-1369

Japan
9F, Tonetsu Shinkawa Bldg.
1-24-8 Shinkawa
Chuo-ku, Tokyo 104-0033
Japan
Tel: (81) 3-3523-3551
Fax: (81) 3-3523-7581

Atmel Operations

Memory
2325 Orchard Parkway
San Jose, CA 95131, USA
Tel: 1(408) 441-0311
Fax: 1(408) 436-4314

Microcontrollers
2325 Orchard Parkway
San Jose, CA 95131, USA
Tel: 1(408) 441-0311
Fax: 1(408) 436-4314

La Chantrerie
BP 70602
44306 Nantes Cedex 3, France
Tel: (33) 2-40-18-18-18
Fax: (33) 2-40-18-19-60

ASIC/ASSP/Smart Cards
Zone Industrielle
13106 Rousset Cedex, France
Tel: (33) 4-42-53-60-00
Fax: (33) 4-42-53-60-01

1150 East Cheyenne Mtn. Blvd.
Colorado Springs, CO 80906, USA
Tel: 1(719) 576-3300
Fax: 1(719) 540-1759

Scottish Enterprise Technology Park
Maxwell Building
East Kilbride G75 0QR, Scotland
Tel: (44) 1355-803-000
Fax: (44) 1355-242-743

RF/Automotive
Theresienstrasse 2
Postfach 3535
74025 Heilbronn, Germany
Tel: (49) 71-31-67-0
Fax: (49) 71-31-67-2340

1150 East Cheyenne Mtn. Blvd.
Colorado Springs, CO 80906, USA
Tel: 1(719) 576-3300
Fax: 1(719) 540-1759

Biometrics/Imaging/Hi-Rel MPU/
High Speed Converters/RF Datacom
Avenue de Rochepleine
BP 123
38521 Saint-Egreve Cedex, France
Tel: (33) 4-76-58-30-00
Fax: (33) 4-76-58-34-80

Literature Requests
www.atmel.com/literature

Printed on recycled paper.

4769C–INDCO–07/05