Data Sheet
VSC7810

Photodetector/Transimpedance Amplifier Family for Optical Communication

Features

- Integrated Photodetector/Transimpedance Amplifier Optimized for High-Speed Optical Communications Applications
- Integrated AGC
- Fibre Channel/Gigabit Ethernet Compatible
- High Bandwidth
- Low Input Noise Equivalent Power
- Large Optically Active Area
- Single 5V Power Supply

Part Number	*Data Rate*	*Bandwidth (MHz)*	*Input Noise (µW rms)*	*Optically Active Area (µm diameter)*
VSC7810	Full Speed: 1.25Gb/s	1200	0.45	100

General Description

The VSC7810 integrated Photodetector/Transimpedance Amplifier provides a highly integrated solution for converting light from a fiber optic communications channel into a differential output voltage. The benefits of Vitesse Semiconductor's Gallium Arsenide H-GaAs process are fully utilized to provide very high bandwidth and low noise in a product with a large optically active area for easy alignment. The sensitivity, duty cycle distortion and jitter meet or exceed all Fibre Channel and Gigabit Ethernet application requirements. Parts are available in either die form, flat-windowed packages or in ball-lens packages.

By using a metal-semiconductor-metal (MSM) photodetector with a monolithic integrated transimpedance amplifier, the input capacitance is lowered which allows for a larger optically active area than in discrete photodetectors. Integration also allows superior tracking over process, temperature and voltage between the photodetector and the amplifier, resulting in higher performance. This part can easily be used in developing Fibre Channel Electro-Optic Receivers which exhibit very high performance and ease of use.

VSC7810 Block Diagram

Photodetector/Transimpedance Amplifier

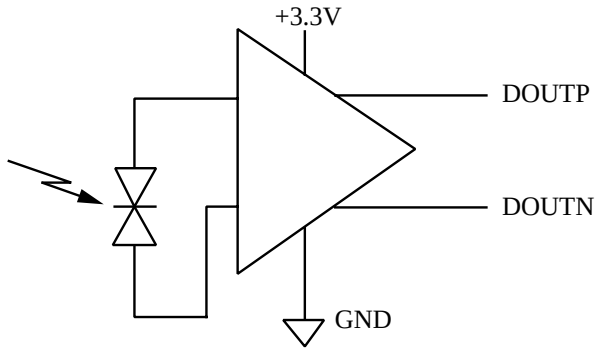

Both DOUTP and DOUTN are back-terminated to 25Ω.

© ***VITESSE*** *SEMICONDUCTOR CORPORATION* • 741 Calle Plano • Camarillo, CA 93012
Tel: (800) VITESSE • FAX: (805) 987-5896 • Email: prodinfo@vitesse.com
Internet: www.vitesse.com

Downloaded from Elcodis.com electronic components distributor

Table 1: Electro-Optical Specifications[1]

Symbol	*Parameter*	*Min*	*Typ*[2]	*Max*	*Units*	*Conditions*
V_{SS}	Supply Voltage	4.5	5.0	5.5	V	
I_{DD}	Supply Current	13	26	40	mA	
PSRR	Power Supply Rejection Ratio	35	-	-	dB	Frequencies up to 40MHz (includes external filter).
λ	Wavelength	700	840	850	nm	
f_C	Low Frequency Cutoff	-	-	1.8	MHz	-3dB, P = -15dBm @ 50MHz[4]
BW	Optical Modulation Bandwidth	800	1200	1300	MHz	-3dB, P = -15dBm @ 50MHz[4]
S	Sensitivity	-22	-25	-27	dBm	1.063Gb/s, BER10^{-12}[3]
R_O	Single-Ended Output Impedance	25	-	60	Ω	
V_D	Differential Output Voltage	0.35	0.52	0.65	V	P = -4.5dBm, R_{LOAD} = 100Ω differential
R_D	Differential Responsivity	0.8	2.2	-	mV/µW	R_{LOAD} = 100Ω P = -15dBm @ 50MHz
V_{DC}	Output Bias Voltage	1.2	1.5	2.5	V	
ΔV_{DC}	Bias Offset Voltage	-	40	150	mV	
NEP_O	Input Noise Equivalent Power	0.35	0.45	0.93	µW rms	P = 0mW[5]
V_{NO}	Output Noise Voltage	0.55	0.66	0.75	mV rms	P = 0mW[5]
DCD	Duty Cycle Distortion	-	1.5	4.5	%	P = -4.5dBm
I_{OUT}	Output Drive Current	2.5	-	8	mA	
PDJ	Pattern Dependent Jitter	20	40	60	ps	P = -4.5dBm +/-10% Voltage Window
	Optically Active Area	-	100	-	µm	Diameter
PPJ	PP Jitter	120	160	200	ps	P = -5dBm
t_R	Rise Time	310	355	400	ps	20%-80% P = -4.5dBm
t_F	Fall Time	280	325	370	ps	20%-80% P = -4.5dBm

Notes: (1) Specified over 0°C (ambient) to 70°C (case). (2) Typical conditions 25°C and 3.3V power supply. (3) See Note 1 in Application Note 48. (4) P = Incident Optical Power (5) See Note 2 in Application Note 48.

© ***VITESSE*** *SEMICONDUCTOR CORPORATION* • 741 Calle Plano • Camarillo, CA 93012
Tel: (800) VITESSE • FAX: (805) 987-5896 • Email: prodinfo@vitesse.com
Internet: www.vitesse.com

Downloaded from Elcodis.com electronic components distributor

Figure 1: Amplifude vs. Frequency

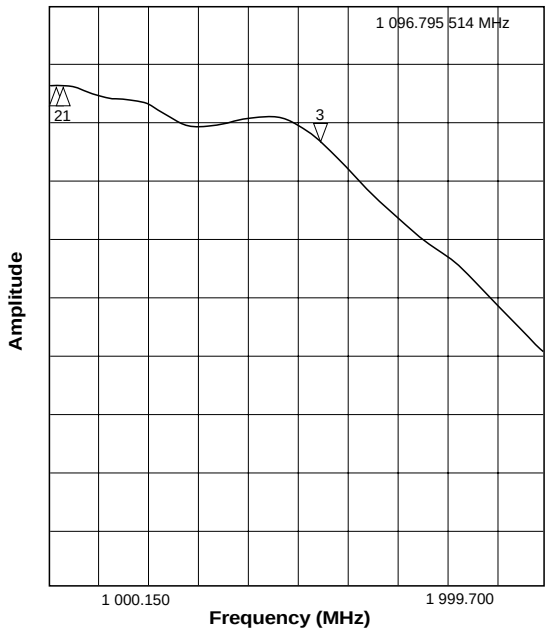

Frequency response of VSC7810WB upper 3db frequency is measured with respect to response at 50 MHz

Table 2: Absolute Maximum Ratings

Symbol	*Parameter*	*Limits*
V_{SS}	Power Supply	6V
T_{STG}	Storage Temperature	-55°C to 125°C (case temperature under bias)
H_{STG}	Storage Humidity	5 to 95% R.H. (including condensation)
H_{OP}	Operating Humidity	8 to 80% R.H. (excluding condensation)
P_{INC}	Incident Optical Power	+3dBm
IS	Impact Shock	500 G. Half Sine Wave Pulse Duration 1 +/-0.5 ms 3 blows in each direction
V_{IB}	Vibration	20 > 2000 > 20 Hz, 10 Minutes 10 G. Peak Acceleration 4 Complete Cycles, 3 Perpendicular Axes
V_{ESD}	ESD Voltage on DOUTP, DOUTN, VSS, GND	1500V

Table 3: Recommended Operating Conditions

Symbol	*Parameter*	*Limits*
V_{SS}	Power Supply	4.5V to 5.5V (5V nominal)
T_{OP}	Operating Temperature	0°C (ambient) to 70° C (case) normal range and 90°C (case) extended range(1)

NOTE: (1) See Note 1 in "Notes on Measurement Conditions & Applications" section of this data sheet for extended temperature range operation.

© ***VITESSE*** *SEMICONDUCTOR CORPORATION* • 741 Calle Plano • Camarillo, CA 93012
Tel: (800) VITESSE • FAX: (805) 987-5896 • Email: prodinfo@vitesse.com
Internet: www.vitesse.com

Downloaded from Elcodis.com electronic components distributor

Table 4: Pin Table Specifications for Ball Lens Packages, Flat Window Packages and Bare Die

Symbol	*Description*
DOUTP	Data output normal (with reference to incident light)
DOUTN	Data output complement (inverting, with reference to incident light)
VSS	Power supply
GND	Ground (package case)

Note: Pin Diagram is identical for both TO-46 and TO-56 package styles.

Figure 2: Pin Diagram

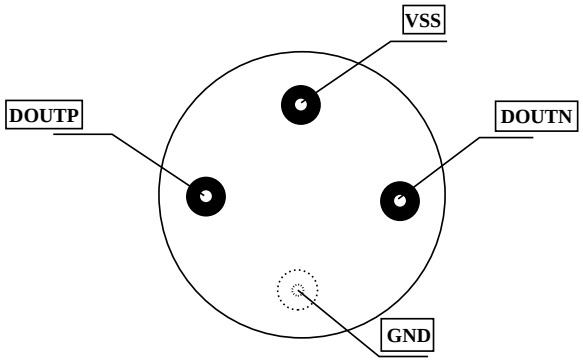

Bottom View

Figure 3: Schematic View of Bare Die Pad Assignments

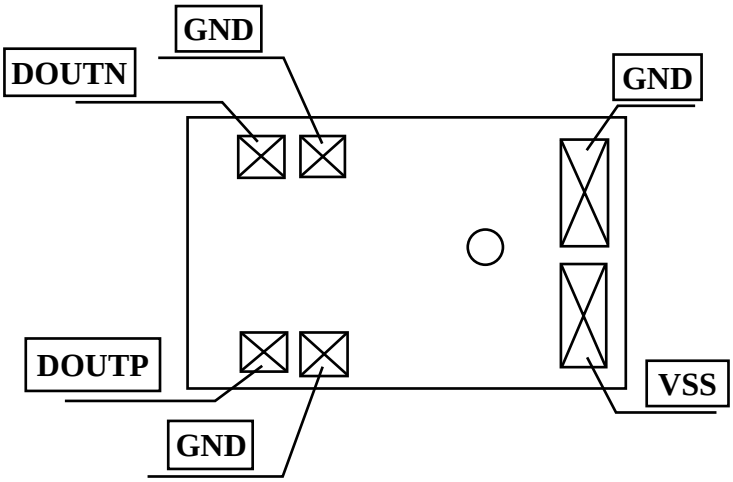

© ***VITESSE*** *SEMICONDUCTOR CORPORATION* • 741 Calle Plano • Camarillo, CA 93012
Tel: (800) VITESSE • FAX: (805) 987-5896 • Email: prodinfo@vitesse.com
Internet: www.vitesse.com

Downloaded from Elcodis.com electronic components distributor

Temperature Dependence of Operating Parameters

This section describes the dependence of important operating parameters shown in Table 1 as a function of *die* (or equivalently junction) tempeature and power supply. In order to relate the die temperature to an equivalent *case* temperature, the following thermal characteristics of the package are provided (note that the thermal conductivity is identical for TO-46 and TO-56 package styles.

Table 5: Thermal Resistance Calculation for TO-56 and TO-46 Packages

Chip Size	0.168cm x 0.104cm	Thermal Path
Chip Area A	$0.015cm^2$	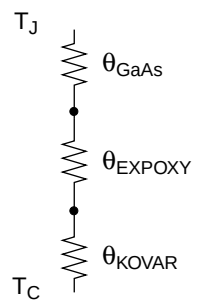
Die Height (T_{DIE})	0.066cm	
Epoxy Thickness (T_{EPOXY})	0.0076cm	
Header Thickness (T_{HEADER}) (Average for TO-46 and TO-56 package)	0.115cm	
Thermal Conductivities		
K GaAs	0.55W/cm °C	
K epoxy	0.0186W/cm °C	
K kovar	0.17W/cm °C	

$$\theta_{GaAs} = \frac{T_{die}}{K_{GaAs}A} = \frac{0.066}{0.55 \times 0.015} = 8\ °C/W$$

$$\theta_{epoxy} = \frac{T_{epoxy}}{K_{epoxy}A} = \frac{0.0076}{0.0186 \times 0.015} = 27.24\ °C/W$$

$$\theta_{kovar} = \frac{T_{kovar}}{K_{kovar}A} = \frac{0.12}{0.17 \times 0.015} = 47\ °C/W$$

θ_{JC} = Thermal Resistance from Junction to Case = (8 + 27.24 + 47) = 82.24 °C/W

Example:

For VSC7810 at nominal supply current of 25mA and Vss = 5V
Temperature rise from junction to case = 0.025A x 5V x 82.24 °C/W = 10.28 °C

© ***VITESSE*** *SEMICONDUCTOR CORPORATION* • 741 Calle Plano • Camarillo, CA 93012
Tel: (800) VITESSE • FAX: (805) 987-5896 • Email: prodinfo@vitesse.com
Internet: www.vitesse.com

Downloaded from Elcodis.com electronic components distributor

Typical Operating Characteristics

I_{DD} vs. Die Temperature

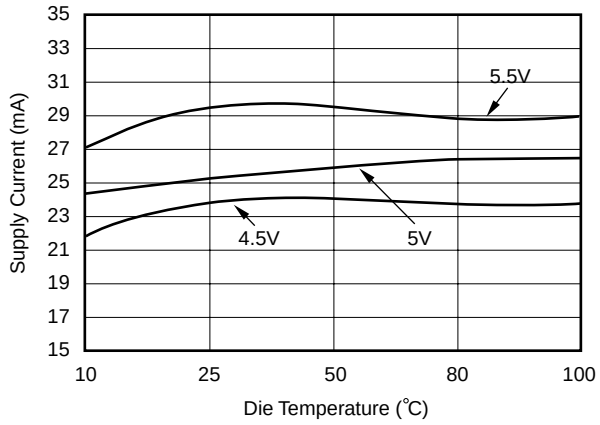

Bandwidth vs. Die Temperature

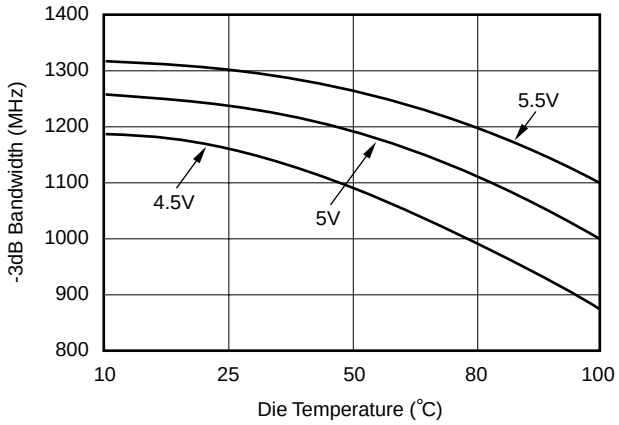

Responsitivity vs. Die Temperature
(Small-Signal Optical Responsitivity at 850nm)

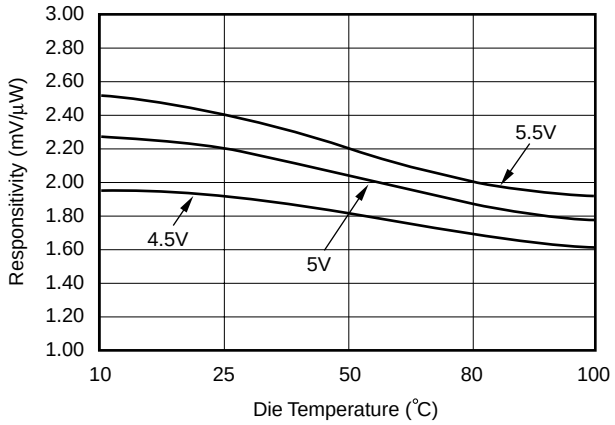

RMS Jitter with PRBS[7] Data vs. Die Temperature

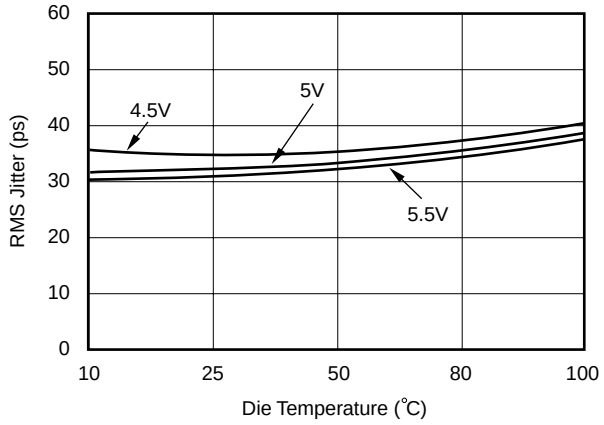

Duty-Cycle Distortion vs. Die Temperature

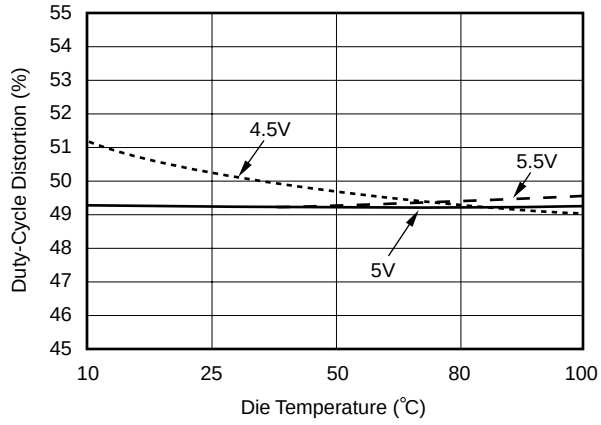

RMS Differential Output Noise Voltage
vs. Die Temperature

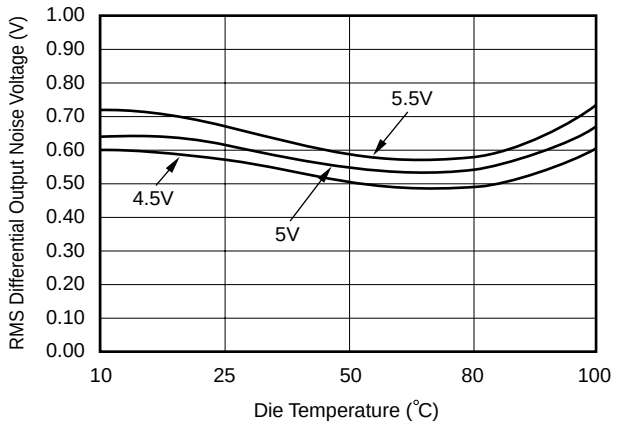

© ***VITESSE*** *SEMICONDUCTOR CORPORATION* • 741 Calle Plano • Camarillo, CA 93012
Tel: (800) VITESSE • FAX: (805) 987-5896 • Email: prodinfo@vitesse.com
Internet: www.vitesse.com

Downloaded from Elcodis.com electronic components distributor

Figure 4: Eye Diagram

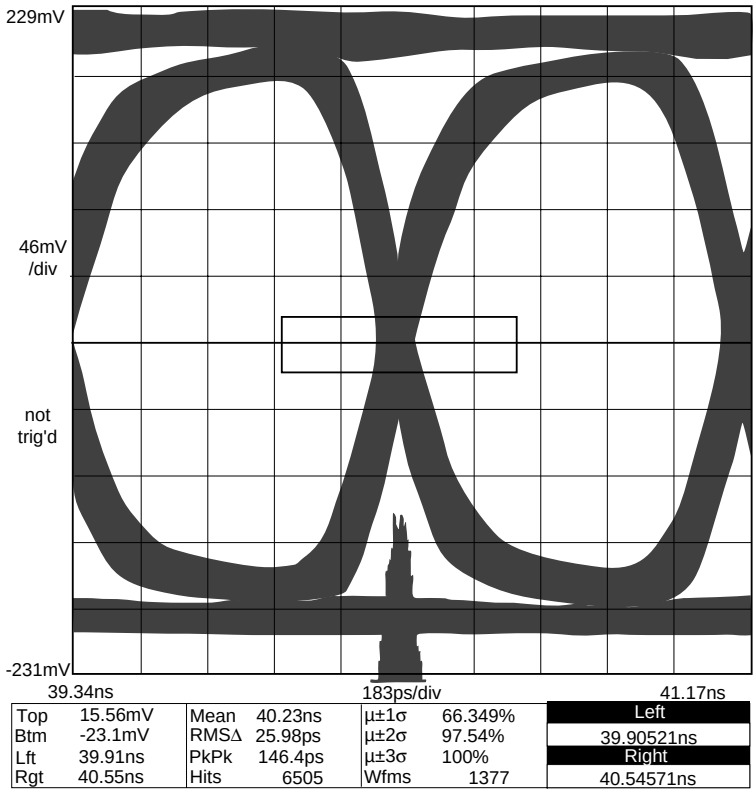

© ***VITESSE*** *SEMICONDUCTOR CORPORATION* • 741 Calle Plano • Camarillo, CA 93012
Tel: (800) VITESSE • FAX: (805) 987-5896 • Email: prodinfo@vitesse.com
Internet: www.vitesse.com

Downloaded from Elcodis.com electronic components distributor

Notes on Measurement Conditions and Applications

Note 1: Noise Measurement Method

The VSC7810 is specified to operate in the following two ranges of temperature: (a) "normal" from 0°C (ambient) to 70°C (case) and (b) "Extended" from 0°C (ambient) to 90°C (case). In the extended range, the operating parameters are specified in Table 6.

Table 6: Specifications Under Extended Temperature Range of Operation

Symbol	*Parameter*	*Min*	*Typ(2)*	*Max*	*Units*	*Conditions*
BW	Optical Modulation Bandwidth	800	900	-	MHz	-3dB, P= -15dBm @ 50MHz

Note 2: Noise Measurement Method

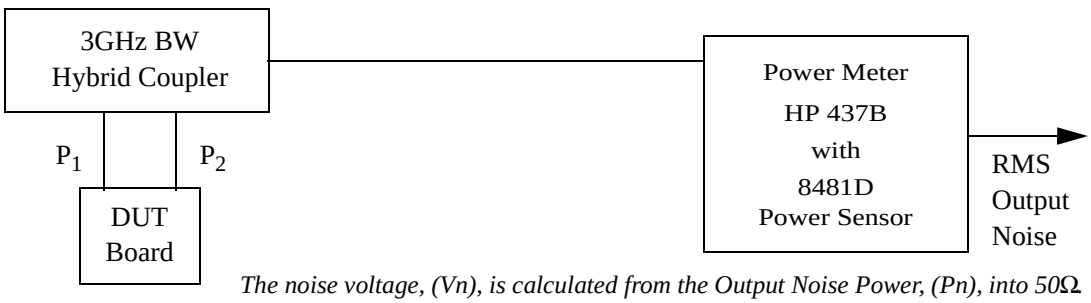

The noise voltage, (Vn), is calculated from the Output Noise Power, (Pn), into 50Ω.

$$Vn = \sqrt{Pn \bullet 50}$$

The noise voltage, Vn, at the output is referred back to the noise power at the input through the responsivity R (with R in volts/watts)

$$NEP = \frac{Vn}{R}$$

The bit error rate can be expressed as:

$$BER = \frac{e^{(-Q_2/2)}}{\sqrt{2\pi Q}} \quad .$$

where ,

For a $BER = 1\times10^{-12}$, the parameter Q = 7.

The sensitivity(s) at a bit error rate of 1×10^{-12} is calculated as follows:

$$S = 10\ log_{10}\left(Q\frac{NEP}{1mW}\right) ,$$

where the NEP is in units of milliwatts and S is in dBm, respectively.

© *VITESSE SEMICONDUCTOR CORPORATION* • 741 Calle Plano • Camarillo, CA 93012
Tel: (800) VITESSE • FAX: (805) 987-5896 • Email: prodinfo@vitesse.com
Internet: www.vitesse.com

Downloaded from Elcodis.com electronic components distributor

Note 3: Measurement Setup for Frequency Response

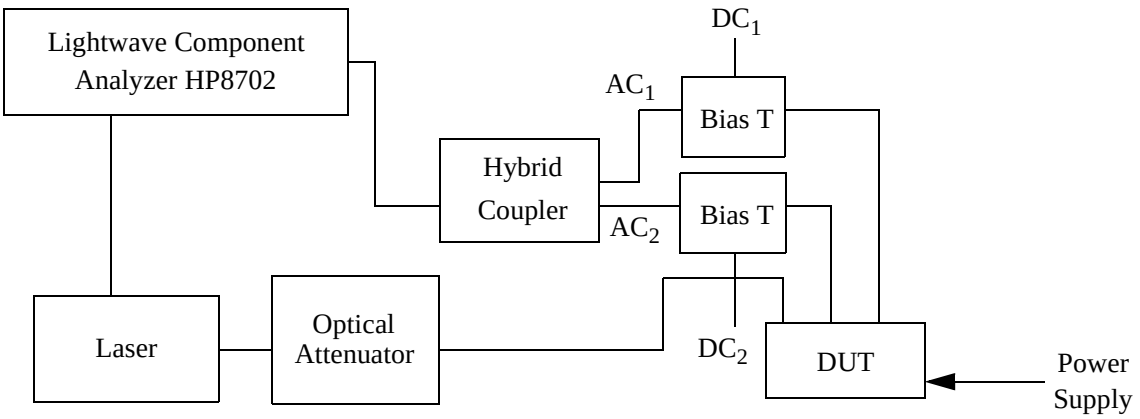

Note 4: Bias T Schematic

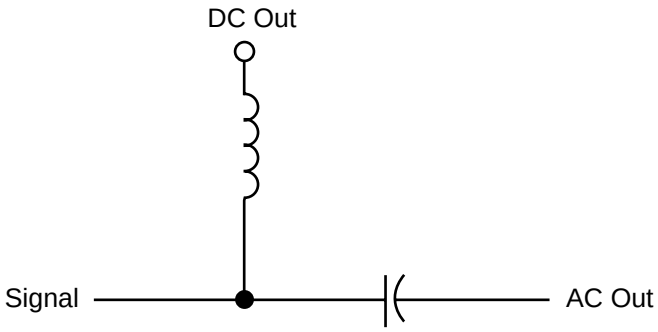

© ***VITESSE*** *SEMICONDUCTOR CORPORATION* • 741 Calle Plano • Camarillo, CA 93012
Tel: (800) VITESSE • FAX: (805) 987-5896 • Email: prodinfo@vitesse.com
Internet: www.vitesse.com

Downloaded from Elcodis.com electronic components distributor

Package Information

Individual Die

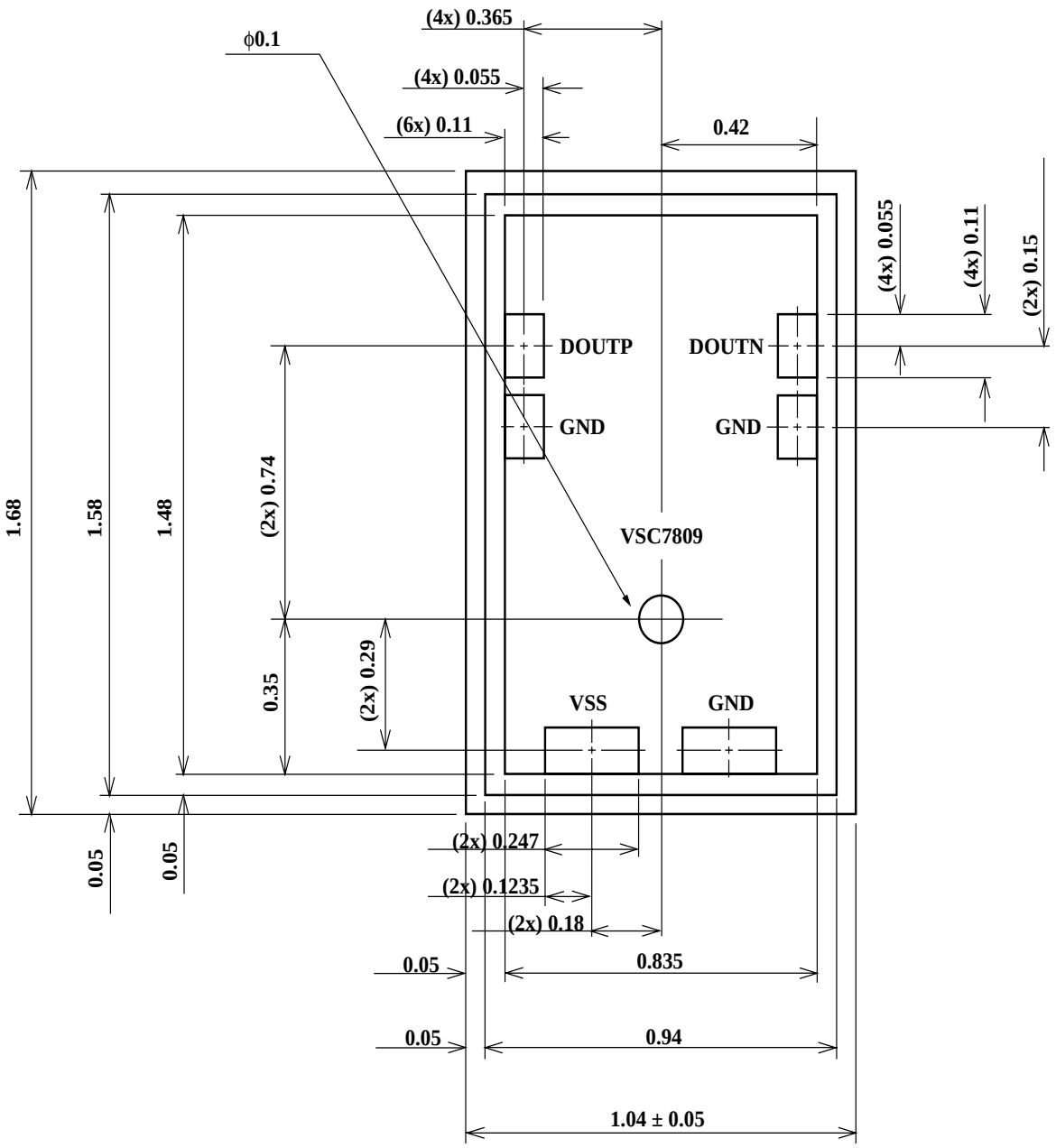

© ***VITESSE*** *SEMICONDUCTOR CORPORATION* • 741 Calle Plano • Camarillo, CA 93012
Tel: (800) VITESSE • FAX: (805) 987-5896 • Email: prodinfo@vitesse.com
Internet: www.vitesse.com

Downloaded from Elcodis.com electronic components distributor

TO-56 Flat Window Package

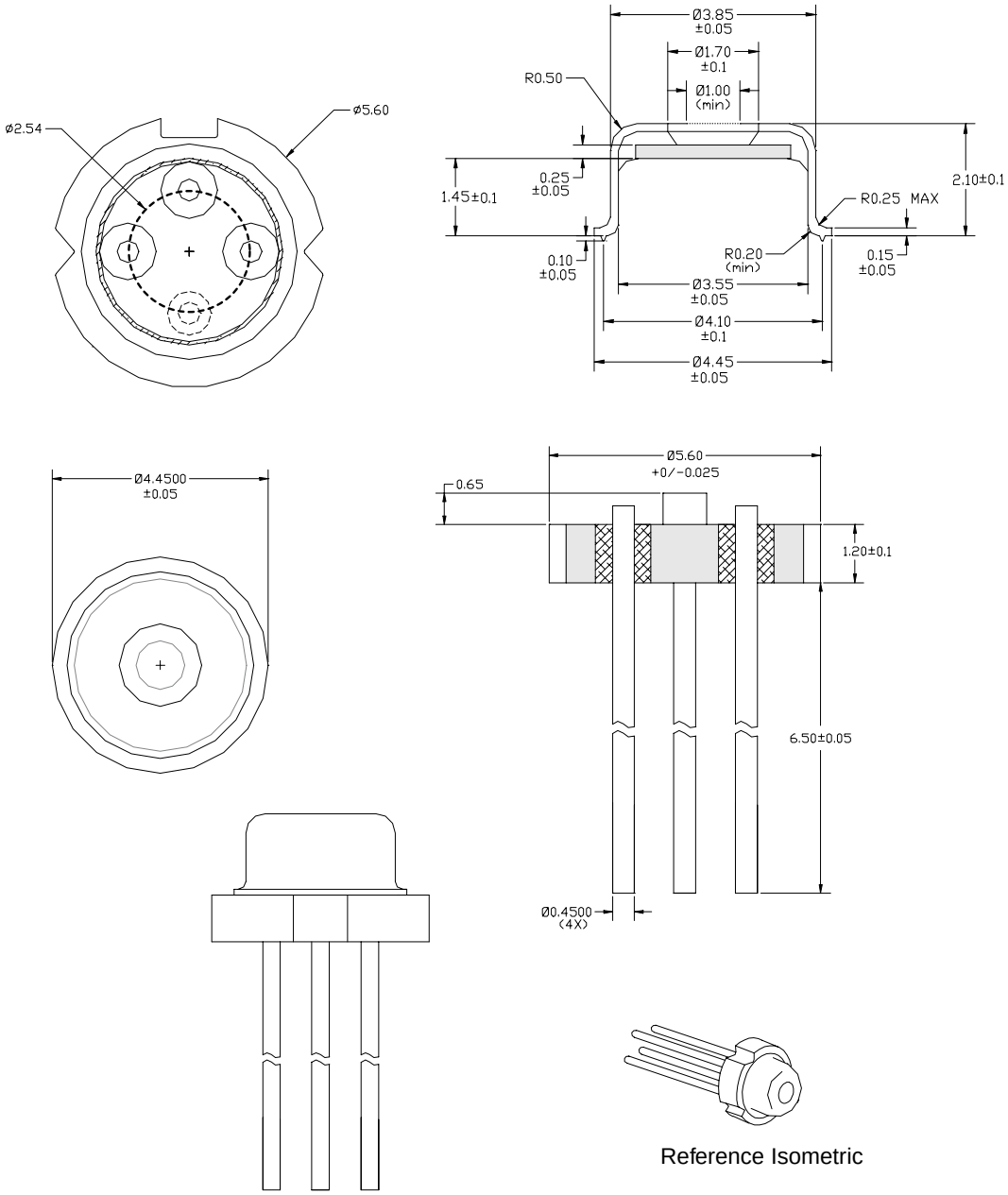

Reference Isometric

© ***VITESSE*** *SEMICONDUCTOR CORPORATION* • 741 Calle Plano • Camarillo, CA 93012
Tel: (800) VITESSE • FAX: (805) 987-5896 • Email: prodinfo@vitesse.com
Internet: www.vitesse.com

Downloaded from Elcodis.com electronic components distributor

TO-46 Ball Lens Package—7mm Lead Length

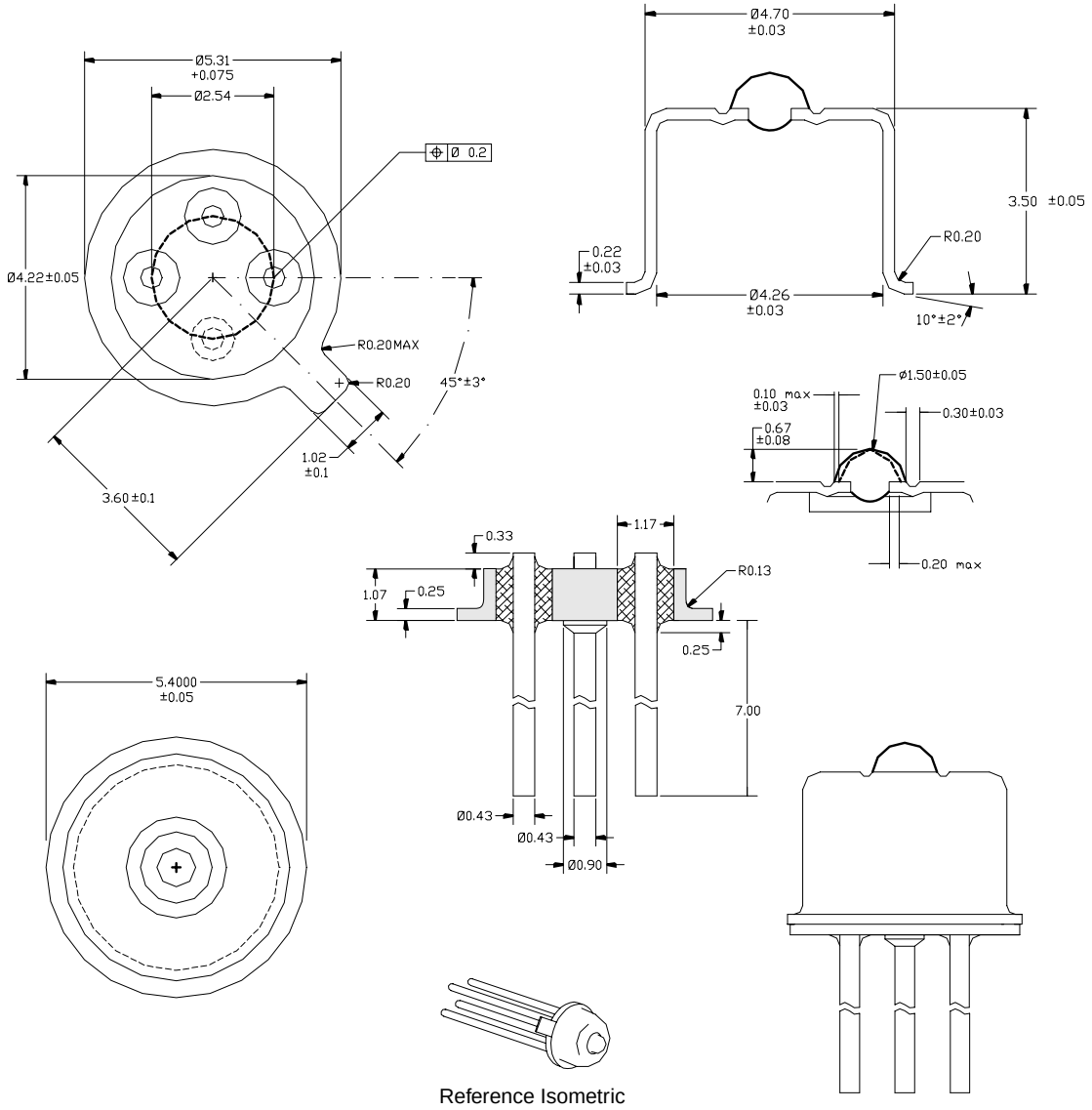

© ***VITESSE*** *SEMICONDUCTOR CORPORATION* • 741 Calle Plano • Camarillo, CA 93012
Tel: (800) VITESSE • FAX: (805) 987-5896 • Email: prodinfo@vitesse.com
Internet: www.vitesse.com

Downloaded from Elcodis.com electronic components distributor

TO-46 Ball Lens Package—13mm Lead Length

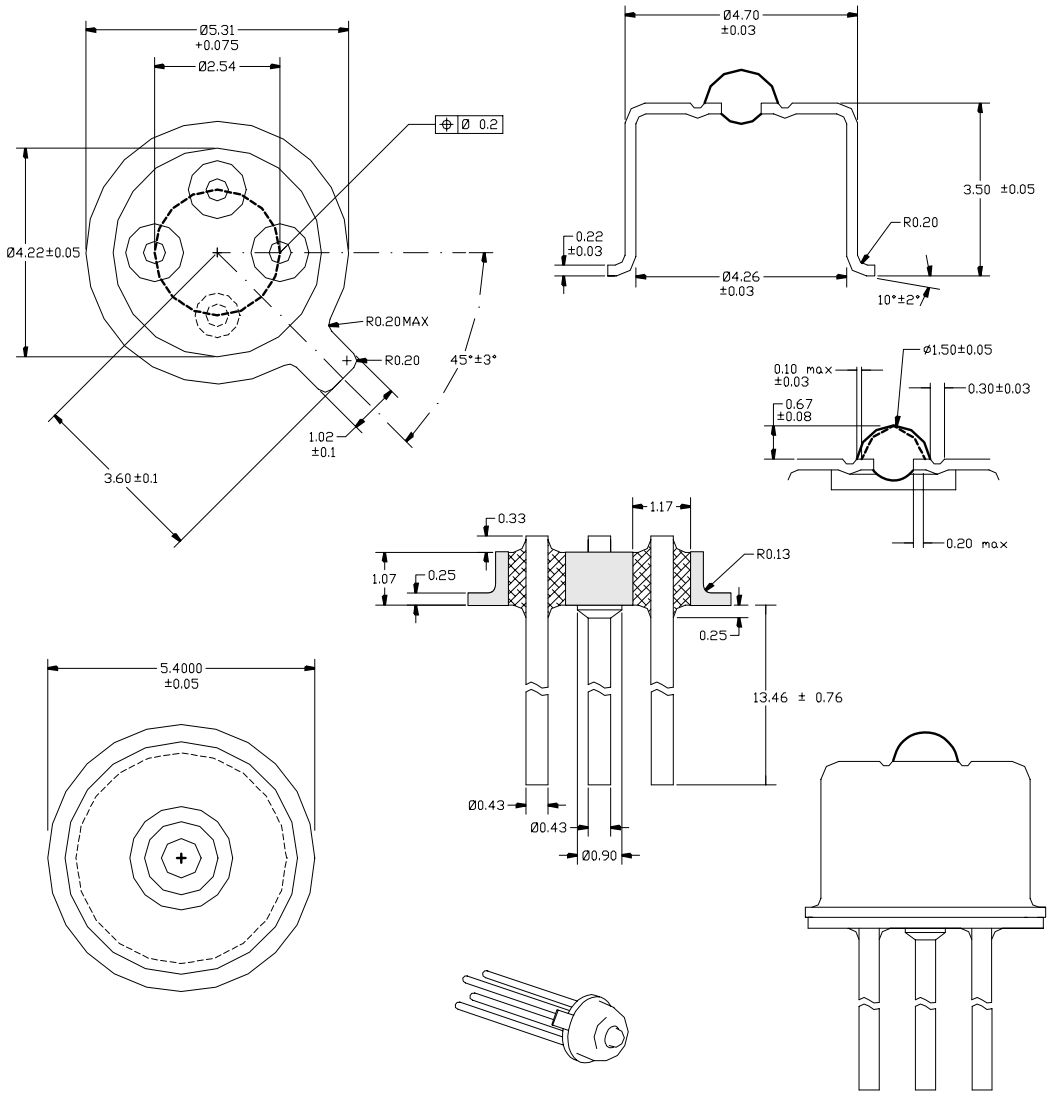

Reference Isometric

© ***VITESSE*** *SEMICONDUCTOR CORPORATION* • 741 Calle Plano • Camarillo, CA 93012
Tel: (800) VITESSE • FAX: (805) 987-5896 • Email: prodinfo@vitesse.com
Internet: www.vitesse.com

Downloaded from Elcodis.com electronic components distributor

© ***VITESSE*** *SEMICONDUCTOR CORPORATION* • 741 Calle Plano • Camarillo, CA 93012
Tel: (800) VITESSE • FAX: (805) 987-5896 • Email: prodinfo@vitesse.com
Internet: www.vitesse.com

Downloaded from Elcodis.com electronic components distributor