Q Xpander Processors
Monolithic IC MM1434

Outline

From ordinary stereo signal input, each of the sound sources is expanded spatially to reproduce sound with a sense of immediacy.
Algorithms developed by Q Sound are faithfully implemented in an IC produced by Mitsumi.

Features

1. Sound spreading is easily modified using an external VR.
2. Few external components required through use of active filters based on Mitsumi's bipolar technology.
3. Low cost achieved through improvements from previous model (MM1354) to VA.

Package

SOP-16A (MM1434XFBE)

Applications

Sound enhancement processor.

Pin Assignment

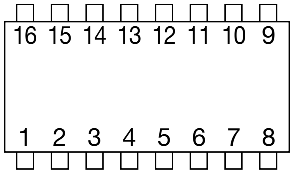
16 15 14 13 12 11 10 9
1 2 3 4 5 6 7 8

SOP-16A

1	RIN	9	LOUT
2	VREF	10	DET
3	S/Q	11	QF4
4	FC	12	QF3
5	SPC	13	QF2
6	QIN	14	QF1
7	ROUT	15	LIN
8	GND	16	VCC

Block Diagram

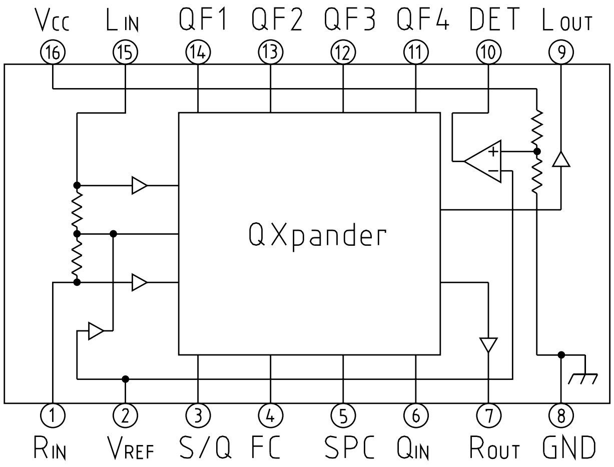
VCC
LIN
QF1
QF2
QF3
QF4
DET
LOUT
16
15
14
13
12
11
10
9
QXpander
1
2
3
4
5
6
7
8
RIN
VREF
S/Q
FC
SPC
QIN
ROUT
GND

Pin Description

Pin No.	Pin name	Functions	Equivalent circuit diagram
1 15	RIN LIN	Input pin R Input pin L	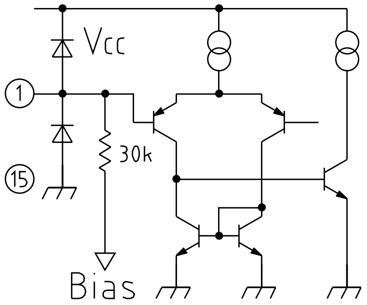 Vcc 1 30k 15 Bias
2	VREF	DC reference voltage pin	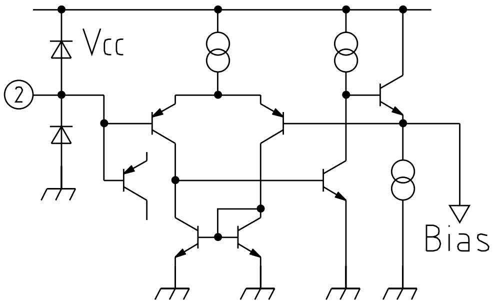
3	S/Q	STEREO/Q Sound Switch pin	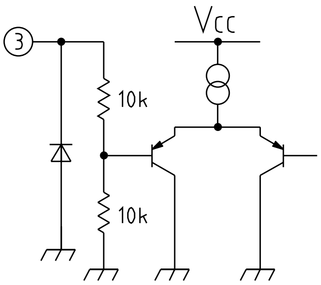 Vcc 3 10k 10k
4	FC	Filter frequency control pin	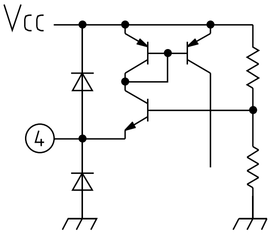
5	SPC	Spread control pin	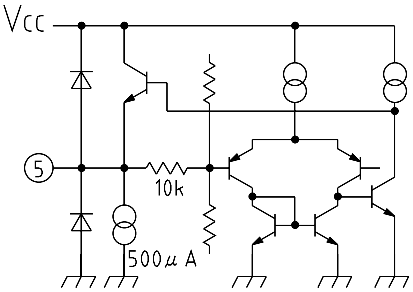 Vcc 5 10k 500μ A

Pin No.	Pin name	Functions	Equivalent circuit diagram
6	QIN	Q Sound input pin	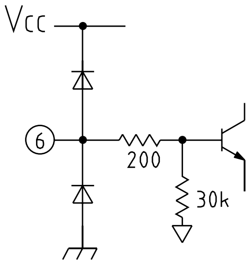 Vcc 6 200 30k
7 9	ROUT LOUT	Output pin R Output pin L	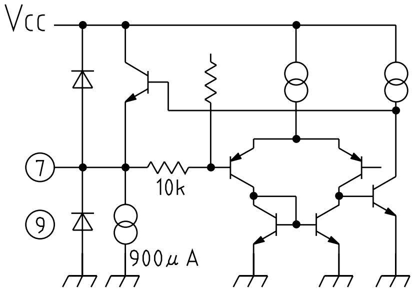 Vcc 7 9 10k 900μ A
8	GND	GND pin	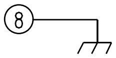
10	DET	Vcc off detect pin	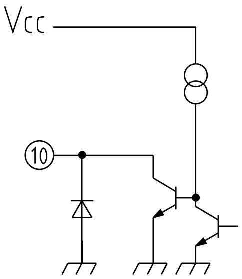
11 12 13 14	QF4 QF3 QF2 QF1	Filter pin Qf4 Filter pin Qf3 Filter pin Qf2 Filter pin Qf1	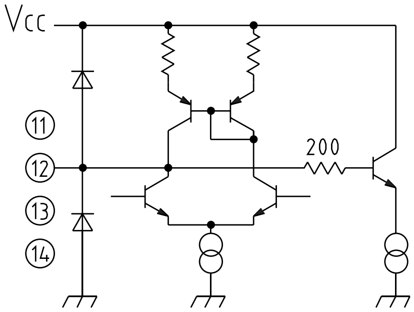 Vcc 11 12 13 14 200
16	Vcc	Supply voltage pin	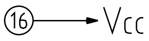

Absolute Maximum Ratings (Except where noted otherwise, Ta=25°C)

Item	Symbol	Ratings	Unit
Storage temperature	T_{STG}	–40~+125	°C
Operating temperature	T_{OPR}	–20~+75	°C
Power supply voltage	V_{CC} max.	12	V
Input voltage	V_{IN} max.	$0 \leqq V_{IN} \leqq V_{CC}$	V
Output current	Io max.	10	mA
Allowable loss	Pd	350	mW

Recommended Operating Conditions

Item	Symbol	Ratings	Unit
Operating temperature	T_{OPR}	–20~+75	°C
Operating voltage Q Xpander(1)	Vopq1	3.8~9.0 R1=18kΩ*1	V
Operating voltage Q Xpander(2)	Vopq2	5.0~9.0 R1=22kΩ*1	V
Operating voltage bypass	Vopb	3.0~9.0	V

Note 1 : When R1 is chosen 22kΩ, the operating voltage Q Xpander becomes narrower. But the input dynamic range becomes wider. The character is illustrated in the typical performance characteristics (3).

Electrical Characteristics (Except where noted otherwise Vcc=8V, Ta=25°C, Vbyp=5V, SW1, 2 ,3 ,4 : A R1=22kΩ)

Item	Symbol	Measurement conditions	Min.	Typ.	Max.	Unit
Consumption current	I_{CC}			16	22	mA
Voltage gain Q Xpander 1	Gqx1	SG1 : 0.5Vrms, 1kHz SW3 : B TP1	7.6	9.1	10.6	dB
Voltage gain Q Xpander 2	Gqx2	SG1 : 0.5Vrms, 1kHz SW3 : B TP2	4.1	5.6	7.1	dB
Voltage gain Q Xpander 3	Gqx3	SG2 : 0.5Vrms, 1kHz SW4 : B TP2	7.6	9.1	10.6	dB
Voltage gain Q Xpander 4	Gqx4	SG2 : 0.5Vrms, 1kHz SW4 : B TP1	4.1	5.6	7.1	dB
Voltage gain bypass 1	Gby1	SG1 : 0.5Vrms, 1kHz Vbyp=0V SW3 : B TP1	–1	0	1	dB
Voltage gain bypass 2	Gby2	SG2 : 0.5Vrms, 1kHz Vbyp=0V SW4 : B TP2	–1	0	1	dB
Input voltage (1)	$V_{IN}1$	V_{CC}=8V *1 SW3, 4 : B TP1, TP2	0.5	0.7		Vrms
Input voltage (2)	$V_{IN}2$	V_{CC}=3.8V R1=18kΩ *1 SW3, 4 : B TP1, TP2	0.15	0.25		Vrms
Input voltage (3)	$V_{IN}3$	V_{CC}=3V R1=18kΩ Vbyp=0V *1 SW3, 4 : B TP1, TP2	0.3	0.45		Vrms
Input voltage (4)	$V_{IN}4$	V_{CC}=8V *2 SW3, 4 : B TP1, TP2	0.25	0.35		Vrms
Total harmonic distortion Q Xpander	THDqx	(a) SG1 : 0.5Vrms, 1kHz SW3 : B (b) SG2 : 0.5Vrms, 1kHz SW4 : B TP1, TP2		0.4	1.0	%
Total harmonic distortion bypass	THDby	(a) SG1 : 0.5Vrms, 1kHz SW3 : B (b) SG2 : 0.5Vrms, 1kHz SW4 : B Vbyp=0V TP1, TP2		0.03	0.3	%
Output noise voltage Q Xpander	Vnoqx	BW=20~20kHz, A Curve TP1, TP2		75	150	µVrms
Output noise voltage bypass	Vnoby	BW=20~20kHz, A Curve Vbyp=0V TP1, TP2		15	60	µVrms
R-L channel balance	Cb	SG1, SG2 : 0.5Vrms, 1kHz Vbyp=0V SW3, 4 : B TP1, TP2	–1.0	0	1.0	dB

Item	Symbol	Measurement conditions	Min.	Typ.	Max.	Unit
Bypass pin voltage (H)	Vbyph	*3	2.1			V
Bypass pin voltage (L)	Vbypl	*4			0.7	V
Bypass pin current (H)	Ibyph	Vbyp=5V *5 TP5			350	µA
Bypass pin current (L)	Ibypl	Vbyp=0V *6 TP5	–10			µA
Recommended power supply off time	TvOFF	*7	0.1		1.0	s
DET terminal voltage (H)	Vdeth	*7 TP6	7.5			V
DET terminal voltage (L)	Vdetl	*7 TP6			0.7	V
VREF terminal current	Iref	SW2 : B	–2.2	–0.6	1	µA
Input resistance	R_{IN}	TP3, TP4	21	30	39	kΩ
Power supply ripple rejection ratio Q Xpander	PSRRqx	SG3 : 50mVrms, 100Hz SW1 : B *8 TP1, TP2		–40	–30	dB
Power supply ripple rejection ratio bypass	PSRRby	SG3 : 50mVrms, 100Hz SW1 : B *8 Vbyp=0V TP1, TP2		–55	–40	dB
Crosstalk (1)	Ct1	SG1 : 0.5Vrms, 1kHz SW3 : B *9 Vbyp=0V TP1, TP2		–85	–70	dB
Crosstalk (2)	Ct2	SG2 : 0.5Vrms, 1kHz SW4 : B *10 Vbyp=0V TP1, TP2		–85	–70	dB

Note 1 : f=1kHz, It is input voltage that THD of output voltage is 1%. Then the signals that are inputted in SG1 and SG2 are in phase. The difference of phase between the left input signal and the right one is 0°.

Note 2 : f=1kHz, It is input voltage that THD of output voltage is 1%. The difference of phase between the left input signal and the right one is 180°.

Note 3 : High-Level input voltage of BYP terminal (3pin) (Q Xpander MODE)

Note 4 : Low-Level input voltage of BYP terminal (3pin) (bypass MODE)

Note 5 : Input current of BYP terminal (3pin) (Vbyp=5V)

Note 6 : Input current of BYP terminal (3pin) (Vbyp=0v)

Note 7 : The mute signal which switches off the power supply of a power amplifier that is connected with MM1434 appears in the 10 terminal.
When the power supply of MM1434 is switched off, the pop noise occur.
We recommend muting the pop noise. The way is that the power supply of MM1434 is switched off after the power supply of the follow power amplifier is switched off.

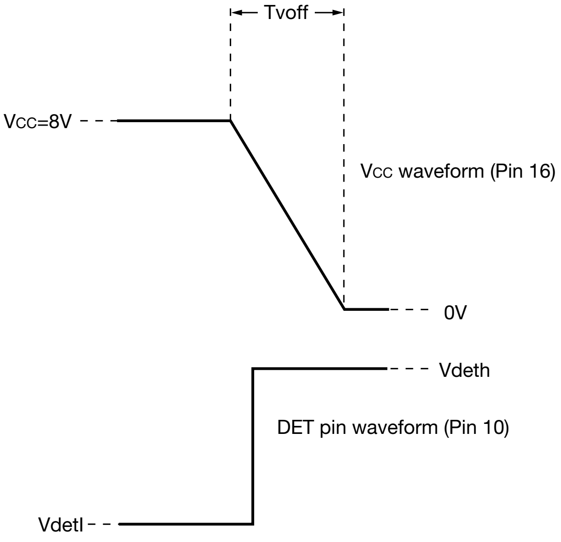

Note 8 : We recommend using the regulator for the power supply which occurs the ripple.

Note 9 : When the signal is input in SG1, it is the ratio of 7pin output voltage to 9pin output voltage.

Note 10 : When the signal is input in SG2, it is the ratio of 9pin output voltage to 7pin output voltage.

Measuring Circuit

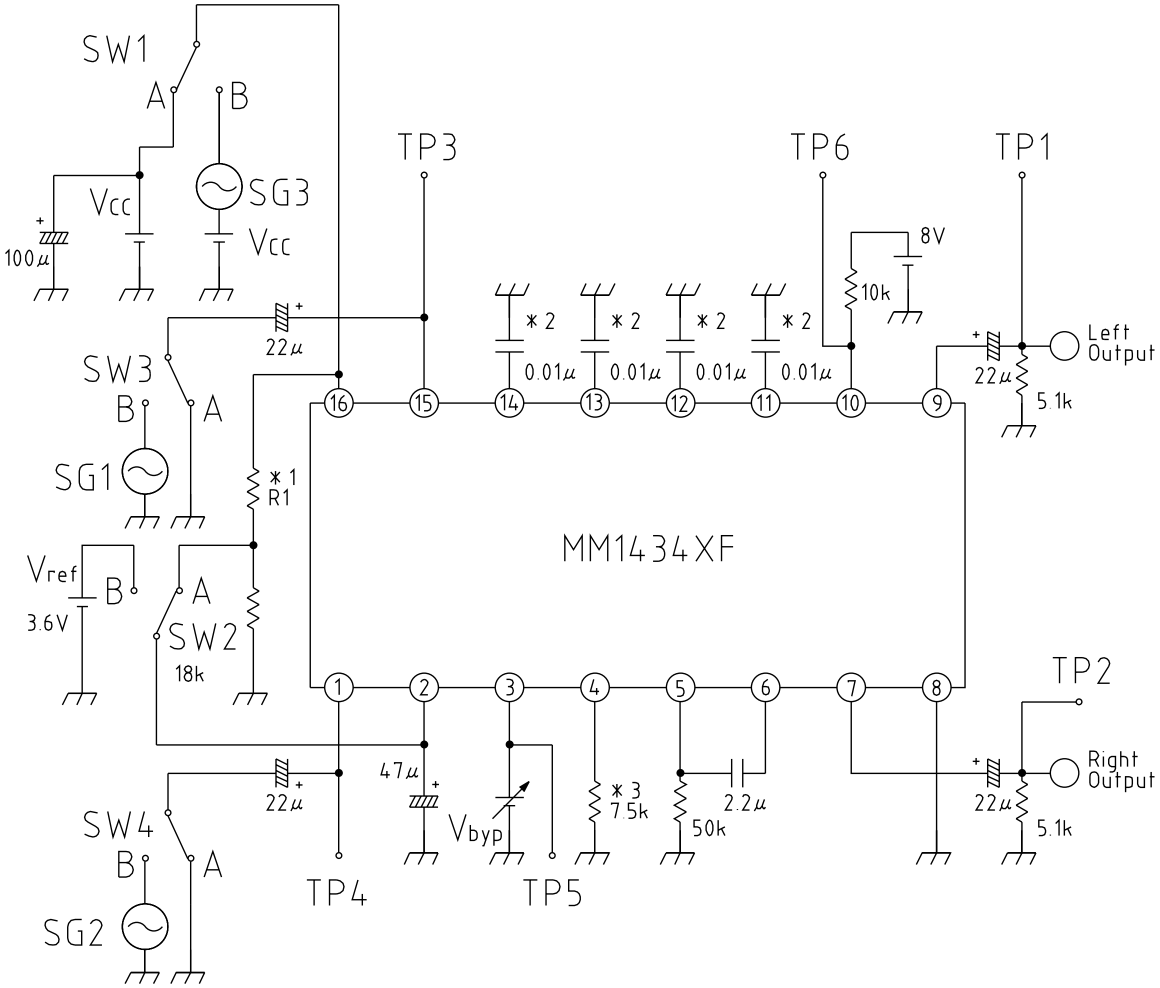
SW1
A
B
SG3
Vcc
Vcc
100μ
TP3
TP6
TP1
8V
10k
＊2
0.01μ
22μ
Left Output
5.1k
SW3
B
A
SG1
＊1
R1
Vref
3.6V
B
A
SW2
18k
MM1434XF
16
15
14
13
12
11
10
9
1
2
3
4
5
6
7
8
TP2
47μ
＊3
7.5k
50k
2.2μ
Right Output
SW4
B
A
SG2
Vbyp
TP4
TP5

Note 1 : At Vcc = 3.8V or 3V, R1 = 18kΩ

At Vcc = 8V, R1 = 22kΩ

Note 2 : Capacitor Tolerance ±5%

Note 3 : Resistor Tolerance ±1%

Application Circuit

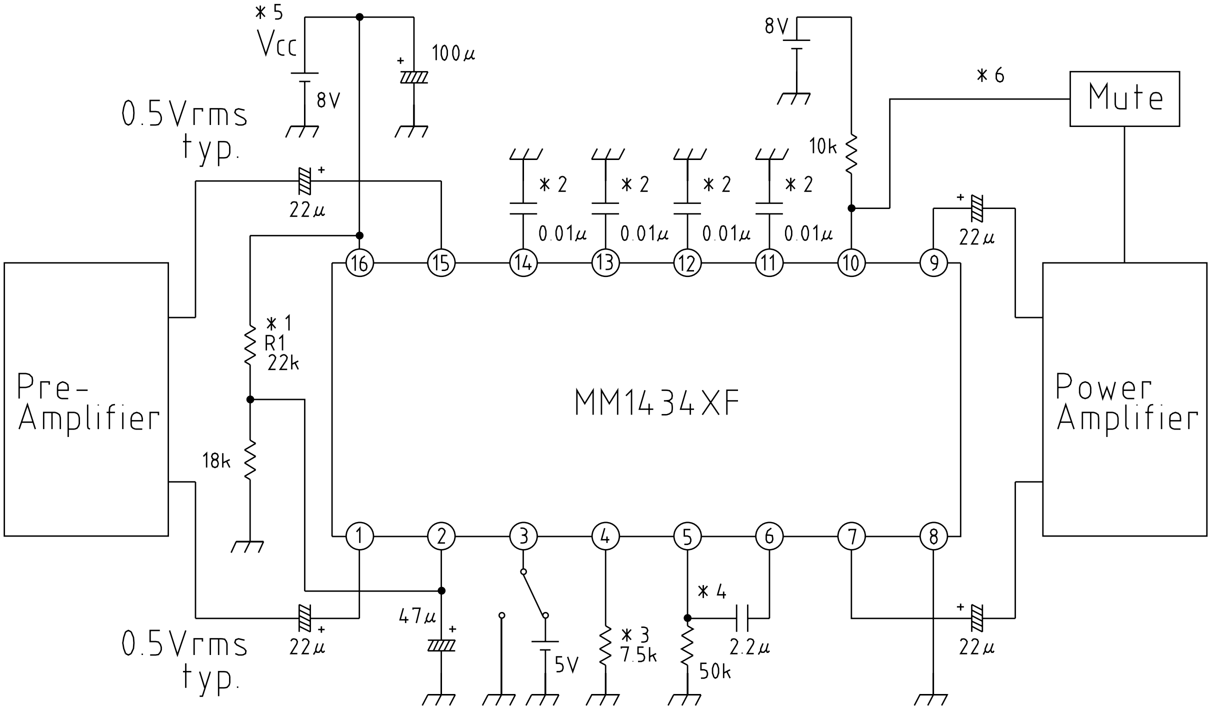
*5
Vcc
8V
100μ
0.5Vrms typ.
22μ
8V
*6
Mute
10k
*2
0.01μ
22μ
16
15
14
13
12
11
10
9
Pre-Amplifier
*1
R1
22k
MM1434XF
Power Amplifier
18k
1
2
3
4
5
6
7
8
*4
47μ
0.5Vrms typ.
22μ
5V
*3
7.5k
2.2μ
50k
22μ

Note 1 : Please see recommended operating conditions Note 1).

Note 2 : Capacitor tolerance ±5%

Note 3 : Resistor tolerance ±1%

Note 4 : The Q Xpander effect (the spread effect) is adjusted with VR.

Note 5 : We recommend using the regulator for the power supply which occurs the ripple.

Note 6 : The mute signal which switches off the power supply of a power amplifier that is connected with MM1434 appears in the 10 terminal.

Note 7 : When the power supply is switched on, the pop noise occur. We recommend muting the pop noise by the power amplifier that is connected with MM1434.

Characteristics

(1) LIN-ROUT (RIN-LOUT) Frequency (Q Xpander)

LIN-ROUT (RIN-LOUT) Voitage gain-Frequency (Q Xpander)

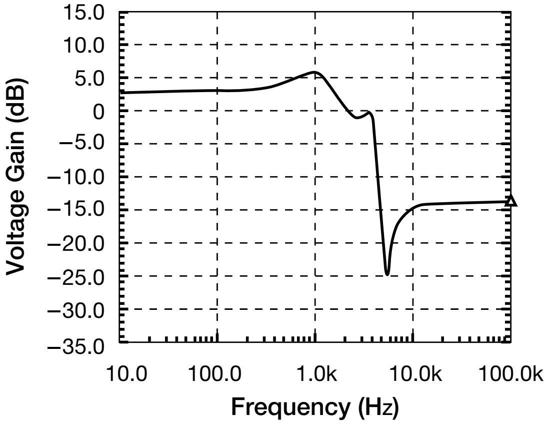

(2) LIN-LOUT (RIN-ROUT) Frequency (Q Xpander)

LIN-LOUT (RIN-ROUT) Voltage gain-Frequency (Q Xpander)

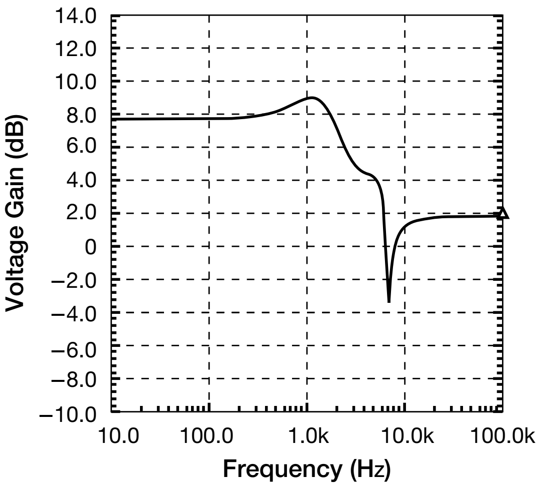

(3) Input voltage amplitude-Power supply voltage (Q Xpander)

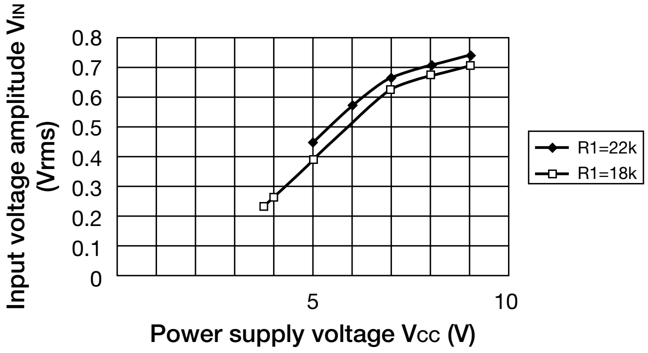

Note : It is input voltage that THD of output voltage is 1%. (f=1kHz)