LT1223

100MHz Current Feedback Amplifier

FEATURES

- 100MHz Bandwidth at $A_V = 1$
- 1000V/µs Slew Rate
- Wide Supply Range: ±5V to ±15V
- 1mV Input Offset Voltage
- 1µA Input Bias Current
- 5MΩ Input Resistance
- 75ns Settling Time to 0.1%
- 50mA Output Current
- 6mA Quiescent Current

APPLICATIONS

- Video Amplifiers
- Buffers
- IF and RF Amplification
- Cable Drivers
- 8-, 10-, 12-Bit Data Acquisition Systems

DESCRIPTION

The LT1223 is a 100MHz current feedback amplifier with very good DC characteristics. The LT1223's high slew rate, 1000V/µs, wide supply range, ±15V, and large output drive, ±50mA, make it ideal for driving analog signals over double-terminated cables. The current feedback amplifier has high gain bandwidth at high gains, unlike conventional op amps.

The LT1223 comes in the industry standard pinout and can upgrade the performance of many older products.

The LT1223 is manufactured on Linear Technology's proprietary complementary bipolar process.

TYPICAL APPLICATION

Video Cable Driver

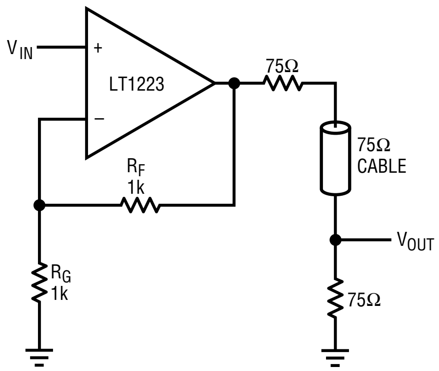

$A_V = 1 + \frac{R_F}{R_G}$

AT AMPLIFIER OUTPUT.
6dB LESS AT V_{OUT}.

LT1223 • TA02

Voltage Gain vs Frequency

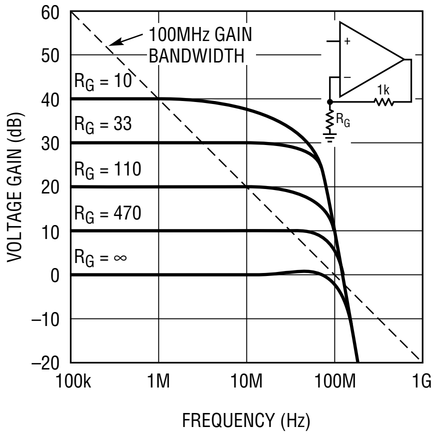

LT1223 • TPC01

ABSOLUTE MAXIMUM RATINGS

Supply Voltage	±18V
Differential Input Voltage	±5V
Input Voltage	Equal to Supply Voltage
Output Short Circuit Duration (Note 1)	Continuous
Operating Temperature Range	
LT1223M	−55°C to 125°C
LT1223C	0°C to 70°C
Storage Temperature Range	−65°C to 150°C
Junction Temperature Plastic Package	150°C
Junction Temperature Ceramic Package	175°C
Lead Temperature (Soldering, 10 sec.)	300°C

PACKAGE/ORDER INFORMATION

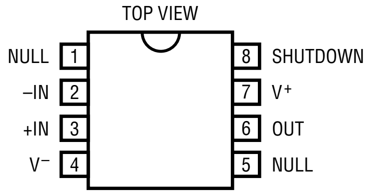

J8 PACKAGE
8-LEAD CERAMIC DIP

N8 PACKAGE
8-LEAD PLASTIC DIP

S8 PACKAGE
8-LEAD PLASTIC SOIC

LT1223 • POI01

$T_{J\,MAX}$ = 175°C, θ_{JA} = 100°C/W(J8)
$T_{J\,MAX}$ = 150°C, θ_{JA} = 100°C/W(N8)
$T_{J\,MAX}$ = 150°C, θ_{JA} = 150°C/W(S8)

ORDER PART NUMBER
LT1223MJ8 LT1223CJ8 LT1223CN8 LT1223CS8
S8 PART MARKING
1223

ELECTRICAL CHARACTERISTICS $V_S = \pm 15V$, $T_A = 25°C$, unless otherwise noted.

SYMBOL	PARAMETER	CONDITIONS	LT1223M/C MIN	TYP	MAX	UNITS
V_{OS}	Input Offset Voltage	$V_{CM} = 0V$		±1	±3	mV
$I_{IN}+$	Noninverting Input Current	$V_{CM} = 0V$		±1	±3	µA
$I_{IN}-$	Inverting Input Current	$V_{CM} = 0V$		±1	±3	µA
e_n	Input Noise Voltage Density	f = 1kHz, R_F = 1k, R_G = 10Ω		3.3		nV/√Hz
i_n	Input Noise Current Density	f = 1kHz, R_F = 1k, R_G = 10Ω		2.2		pA/√Hz
R_{IN}	Input Resistance	$V_{IN} = \pm 10V$	1	10		MΩ
C_{IN}	Input Capacitance			1.5		pF
	Input Voltage Range		±10	±12		V
CMRR	Common-Mode Rejection Ratio	$V_{CM} = \pm 10V$	56	63		dB
	Inverting Input Current Common-Mode Rejection	$V_{CM} = \pm 10V$		30	100	nA/V
PSRR	Power Supply Rejection Ratio	V_S = ±4.5V to ±18V	68	80		dB
	Noninverting Input Current Power Supply Rejection	V_S = ±4.5V to ±18V		12	100	nA/V
	Inverting Input Current Power Supply Rejection	V_S = ±4.5V to ±18V		60	500	nA/V
A_V	Large Signal Voltage Gain	R_{LOAD} = 400Ω, $V_{OUT} = \pm 10V$	70	89		dB
R_{OL}	Transresistance, $\Delta V_{OUT}/\Delta I_{IN}-$	R_{LOAD} = 400Ω, $V_{OUT} = \pm 10V$	1.5	5		MΩ
V_{OUT}	Maximum Output Voltage Swing	R_{LOAD} = 200Ω	±10	±12		V
I_{OUT}	Maximum Output Current	R_{LOAD} = 200Ω	50	60		mA
SR	Slew Rate	R_F = 1.5k, R_G = 1.5k, (Note 2)	800	1300		V/µs
BW	Bandwidth	R_F = 1k, R_G = 1k, V_{OUT} = 100mV		100		MHz
t_r	Rise Time	R_F = 1.5k, R_G = 1.5k, V_{OUT} = 1V		6.0		ns
t_{PD}	Propagation Delay	R_F = 1.5k, R_G = 1.5k, V_{OUT} = 1V		6.0		ns
	Overshoot	R_F = 1.5k, R_G = 1.5k, V_{OUT} = 1V		5		%
t_s	Settling Time, 0.1%	R_F = 1k, R_G = 1k, V_{OUT} = 10V		75		ns
	Differential Gain	R_F = 1k, R_G = 1k, R_L = 150Ω		0.02		%
	Differential Phase	R_F = 1k, R_G = 1k, R_L = 150Ω		0.12		Deg
R_{OUT}	Open-Loop Output Resistance	V_{OUT} = 0, I_{OUT} = 0		35		Ω
I_S	Supply Current	V_{IN} = 0V		6	10	mA
	Supply Current, Shutdown	Pin 8 Current = 200µA		2	4	mA

ELECTRICAL CHARACTERISTICS $V_S = \pm15V$, $V_{CM} = 0V$, $0°C \le T_A \le 70°C$, unless otherwise noted.

					LT1223C		
SYMBOL	PARAMETER	CONDITIONS		MIN	TYP	MAX	UNITS
V_{OS}	Input Offset Voltage	$V_{CM} = 0V$	●	±1	±3	mV	
$I_{IN}+$	Noninverting Input Current	$V_{CM} = 0V$	●	±1	±3	μA	
$I_{IN}–$	Inverting Input Current	$V_{CM} = 0V$	●	±1	±3	μA	
R_{IN}	Input Resistance	$V_{IN} = \pm10V$	●	1	10		MΩ
	Input Voltage Range		●	±10	±12		V
CMRR	Common-Mode Rejection Ratio	$V_{CM} = \pm10V$	●	56	63		dB
	Inverting Input Current Common-Mode Rejection	$V_{CM} = \pm10V$	●		30	100	nA/V
PSRR	Power Supply Rejection Ratio	$V_S = \pm4.5V$ to $\pm18V$	●	68	80		dB
	Noninverting Input Current Power Supply Rejection	$V_S = \pm4.5V$ to $\pm18V$	●		12	100	nA/V
	Inverting Input Current Power Supply Rejection	$V_S = \pm4.5V$ to $\pm18V$	●		60	500	nA/V
A_V	Large-Signal Voltage Gain	$R_{LOAD} = 400\Omega$, $V_{OUT} = \pm10V$	●	70	89		dB
R_{OL}	Transresistance, $\Delta V_{OUT}/\Delta I_{IN}–$	$R_{LOAD} = 400\Omega$, $V_{OUT} = \pm10V$	●	1.5	5		MΩ
V_{OUT}	Maximum Output Voltage Swing	$R_{LOAD} = 200\Omega$	●	±10	±12		V
I_{OUT}	Maximum Output Current	$R_{LOAD} = 200\Omega$	●	50	60		mA
I_S	Supply Current	$V_{IN} = 0V$	●		6	10	mA
	Supply Current, Shutdown	Pin 8 Current = 200μA	●		2	4	mA

ELECTRICAL CHARACTERISTICS $V_S = \pm15V$, $V_{CM} = 0V$, $-55°C \le T_A \le 125°C$, unless otherwise noted.

					LT1223M		
SYMBOL	PARAMETER	CONDITIONS		MIN	TYP	MAX	UNITS
V_{OS}	Input Offset Voltage	$V_{CM} = 0V$	●		±1	±5	mV
$I_{IN}+$	Noninverting Input Current	$V_{CM} = 0V$	●		±1	±5	μA
$I_{IN}–$	Inverting Input Current	$V_{CM} = 0V$	●		±1	±10	μA
R_{IN}	Input Resistance	$V_{IN} = \pm10V$	●	1	10		MΩ
	Input Voltage Range		●	±10	±12		V
CMRR	Common-Mode Rejection Ratio	$V_{CM} = \pm10V$	●	56	63		dB
	Inverting Input Current Common-Mode Rejection	$V_{CM} = \pm10V$	●		30	100	nA/V
PSRR	Power Supply Rejection Ratio	$V_S = \pm4.5V$ to $\pm15V$	●	68	80		dB
	Noninverting Input Current Power Supply Rejection	$V_S = \pm4.5V$ to $\pm15V$	●		12	200	nA/V
	Inverting Input Current Power Supply Rejection	$V_S = \pm4.5V$ to $\pm15V$	●		60	500	nA/V
A_V	Large-Signal Voltage Gain	$R_{LOAD} = 400\Omega$, $V_{OUT} = \pm10V$	●	70	89		dB
R_{OL}	Transresistance, $\Delta V_{OUT}/\Delta I_{IN}–$	$R_{LOAD} = 400\Omega$, $V_{OUT} = \pm10V$	●	1.5	5		MΩ
V_{OUT}	Maximum Output Voltage Swing	$R_{LOAD} = 200\Omega$	●	±7	±12		V
I_{OUT}	Maximum Output Current	$R_{LOAD} = 200\Omega$	●	35	60		mA
I_S	Supply Current	$V_{IN} = 0V$	●		6	10	mA
	Supply Current, Shutdown	Pin 8 Current = 200μA	●		2	4	mA

The ● denotes the specifications which apply over the full operating temperature range.

Note 1: A heat sink may be required.

Note 2: Noninverting operation, $V_{OUT} = \pm10V$, measured at ±5V.

TYPICAL PERFORMANCE CHARACTERISTICS

Supply Current vs Supply Voltage, V_{IN} = 0 (Operating)

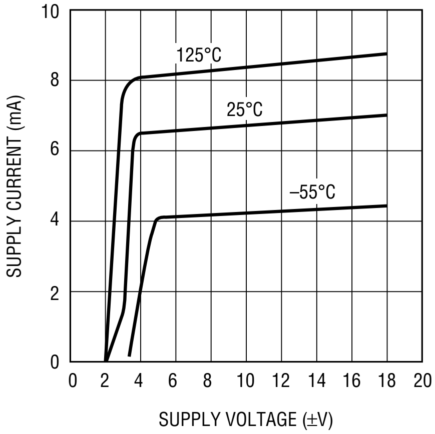

LT1223 • TPC02

Supply Current vs Supply Voltage (Shutdown)

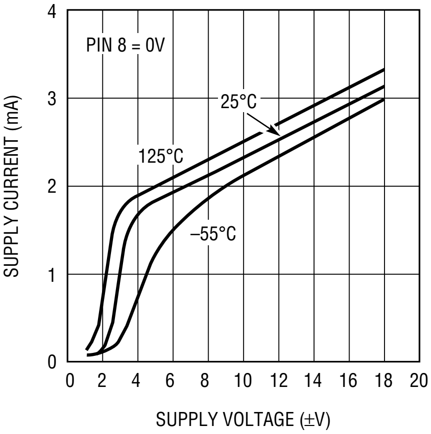

LT1223 • TPC03

Output Short Circuit-Current vs Temperature

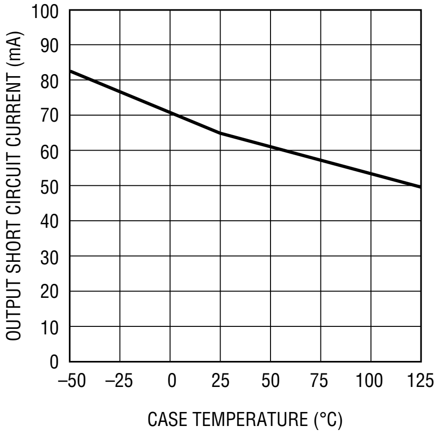

LT1223 • TPC04

Input Common-Mode Limit vs Temperature

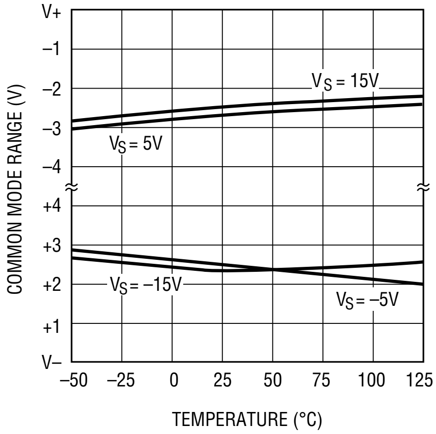

LT1223 • TPC05

+I_B vs Common-Mode Voltage

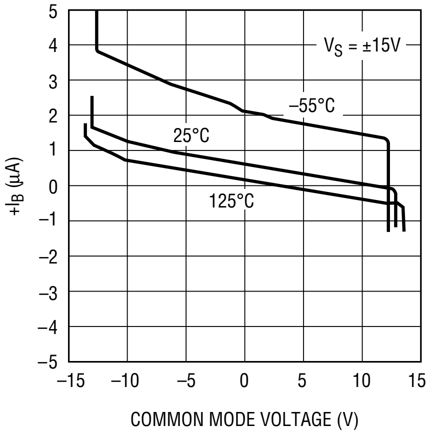

LT1223 • TPC06

−I_B vs Common-Mode Voltage

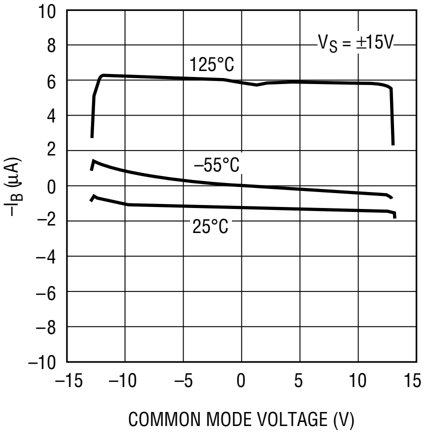

LT1223 • TPC07

V_{OS} vs Common-Mode Voltage

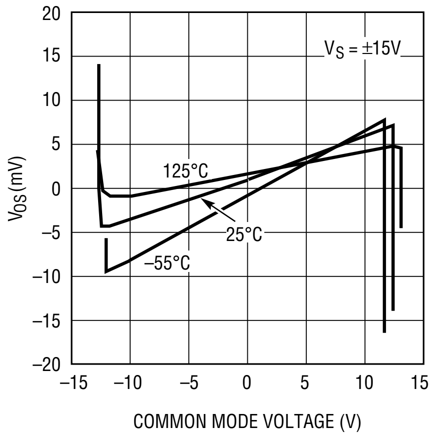

LT1223 • TPC08

Output Voltage Swing vs Load Resistor

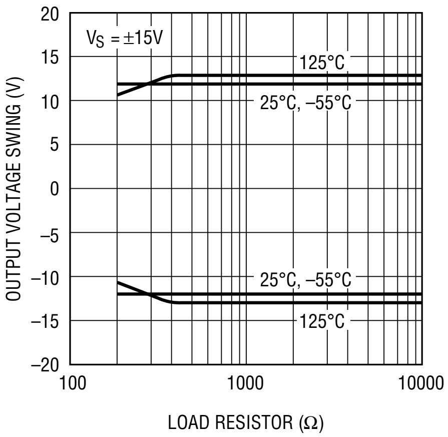

LT1223 • TPC09

Output Voltage Swing vs Supply Voltage

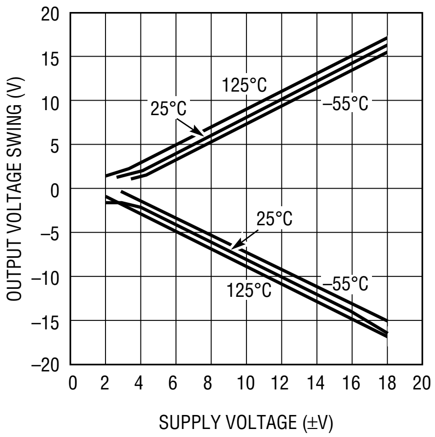

LT1223 • TPC10

TYPICAL PERFORMANCE CHARACTERISTICS

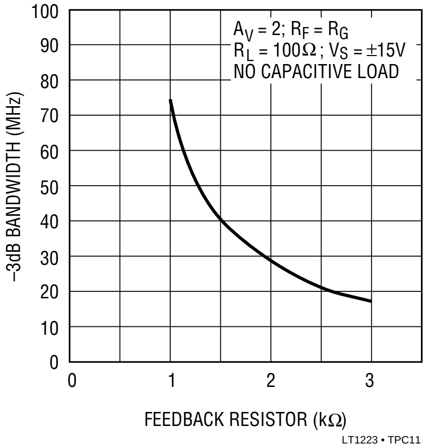
–3dB Bandwidth vs Feedback Resistor

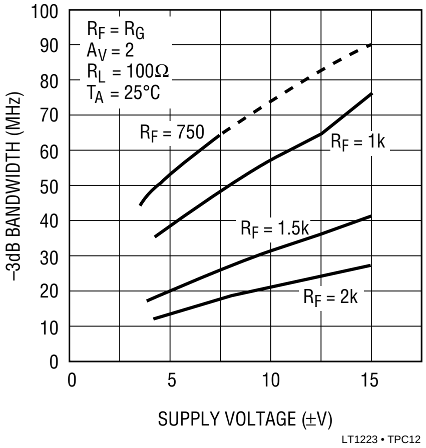
–3dB Bandwidth vs Supply Voltage

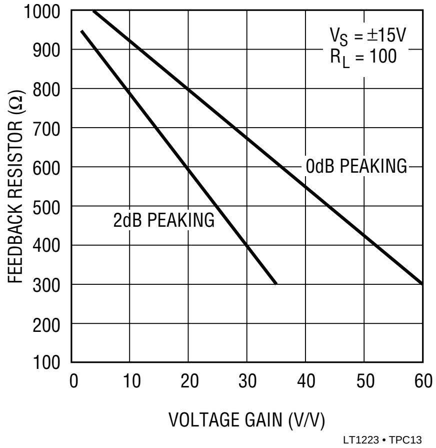
Minimum Feedback Resistor vs Voltage Gain

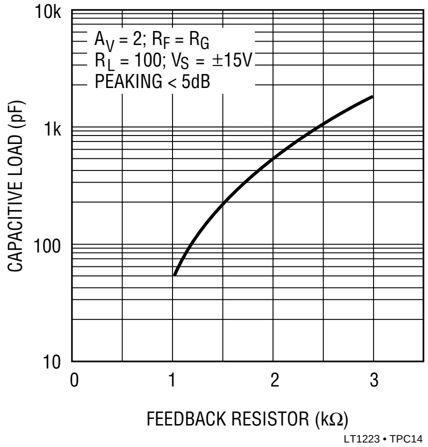
Maximum Capacitive Load vs Feedback Resistor

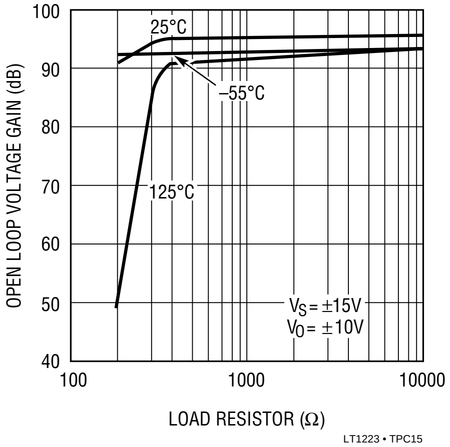
Open-Loop Voltage Gain vs Load Resistor

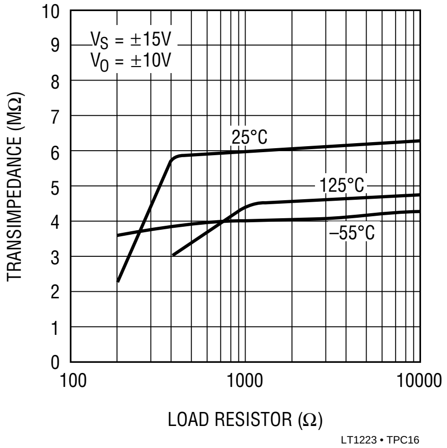
Transimpedance vs Load Resistor

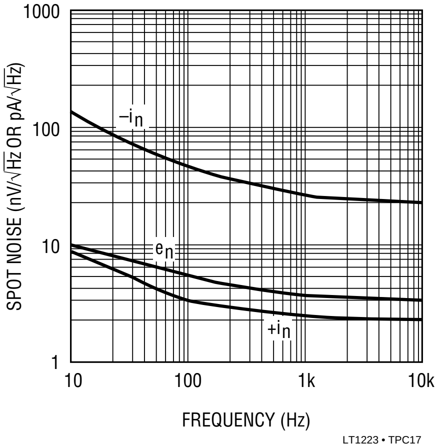
Spot Noise Voltage and Current vs Frequency

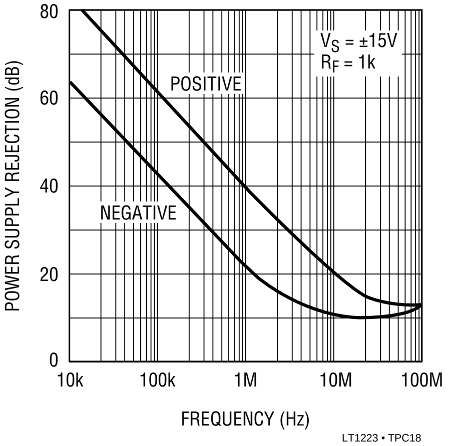
Power Supply Rejection vs Frequency

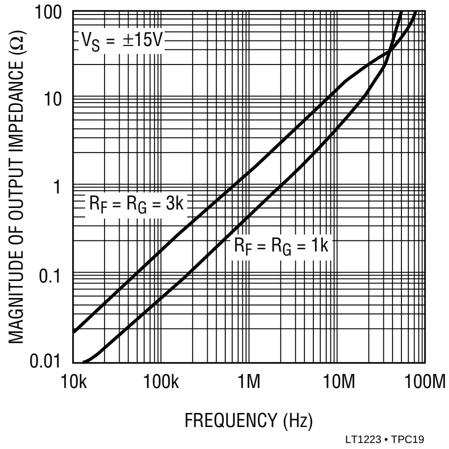
Output Impedance vs Frequency

TYPICAL PERFORMANCE CHARACTERISTICS

Voltage Gain and Phase vs Frequency

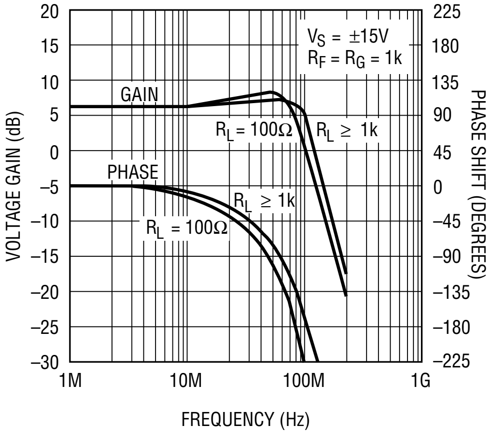

LT1223 • TPC20

Total Harmonic Distortion vs Frequency

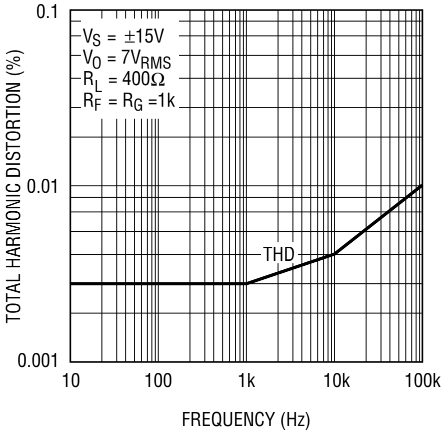

LT1223 • TPC21

2nd and 3rd Harmonic Distortion vs Frequency

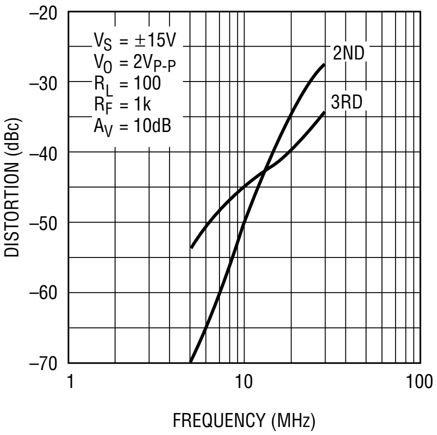

LT1223 • TPC22

Noninverting Amplifier Settling Time to 10mV vs Output Step

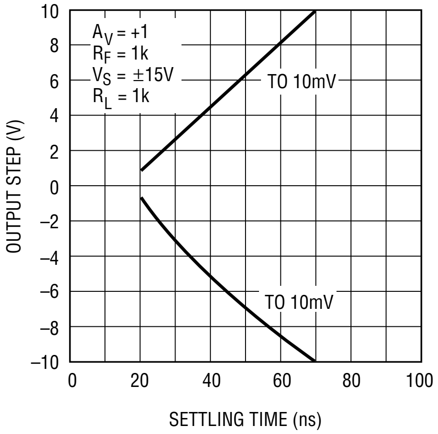

LT1223 • TPC23

Noninverting Amplifier Settling Time to 1mV vs Output Step

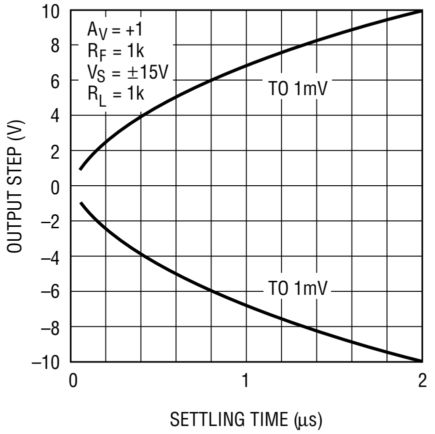

LT1223 • TPC24

Inverting Amplifier Settling Time vs Output Step

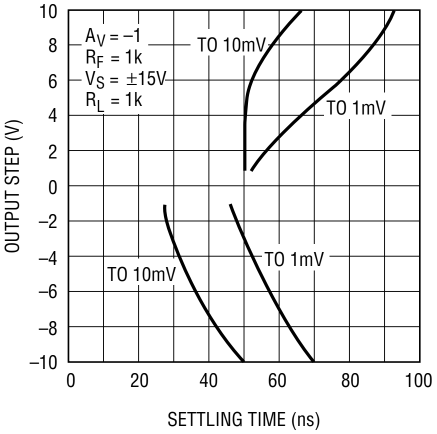

LT1223 • TPC25

APPLICATIONS INFORMATION

Current Feedback Basics

The small-signal bandwidth of the LT1223, like all current feedback amplifiers, isn't a straight inverse function of the closed-loop gain. This is because the feedback resistors determine the amount of current driving the amplifier's internal compensation capacitor. In fact, the amplifier's feedback resistor (R_F) from output to inverting input works with internal junction capacitances of the LT1223 to set the closed-loop bandwidth.

Even though the gain set resistor (R_G) from inverting input to ground works with R_F to set the voltage gain just like it does in a voltage feedback op amp, the closed-loop bandwidth does not change. This is because the equivalent gain bandwidth product of the current feedback amplifier is set by the Thevenin equivalent resistance at the inverting input and the internal compensation capacitor. By keeping R_F constant and changing the gain with R_G, the Thevenin resistance changes by the same amount as the change in gain. As a result, the net closed-loop bandwidth of the LT1223 remains the same for various closed-loop gains.

APPLICATIONS INFORMATION

The curve on the first page shows the LT1223 voltage gain versus frequency while driving 100Ω, for five gain settings from 1 to 100. The feedback resistor is a constant 1k and the gain resistor is varied from infinity to 10Ω. Shown for comparison is a plot of the fixed 100MHz gain bandwidth limitation that a voltage feedback amplifier would have. It is obvious that for gains greater than one, the LT1223 provides 3 to 20 times more bandwidth. It is also evident that second order effects reduce the bandwidth somewhat at the higher gain settings.

Feedback Resistor Selection

Because the feedback resistor determines the compensation of the LT1223, bandwidth and transient response can be optimized for almost every application. To increase the bandwidth when using higher gains, the feedback resistor (and gain resistor) can be reduced from the nominal 1k value. The Minimum Feedback Resistor versus Voltage Gain curve shows the values to use for ±15V supplies. Larger feedback resistors can also be used to slow down the LT1223 as shown in the –3dB Bandwidth versus Feedback Resistor curve.

Capacitive Loads

The LT1223 can be isolated from capacitive loads with a small resistor (10Ω to 20Ω) or it can drive the capacitive load directly if the feedback resistor is increased. Both techniques lower the amplifier's bandwidth about the same amount. The advantage of resistive isolation is that the bandwidth is only reduced when the capacitive load is present. The disadvantage of resistor isolation is that resistive loading causes gain errors. Because the DC accuracy is not degraded with resistive loading, the desired way of driving capacitive loads, such as flash converters, is to increase the feedback resistor. The Maximum Capacitive Load versus Feedback Resistor curve shows the value of feedback resistor and capacitive load that gives 5dB of peaking. For less peaking, use a larger feedback resistor.

Power Supplies

The LT1223 may be operated with single or split supplies as low as ±4V (8V total) to as high as ±18V (36V total). It is not necessary to use equal value split supplies, however, the offset voltage will degrade about 350μV per volt of mismatch. The internal compensation capacitor decreases with increasing supply voltage. The –3dB Bandwidth versus Supply Voltage curve shows how this affects the bandwidth for various feedback resistors. Generally, the bandwidth at ±5V supplies is about half the value it is at ±15V supplies for a given feedback resistor.

The LT1223 is very stable even with minimal supply bypassing, however, the transient response will suffer if the supply rings. It is recommended for good slew rate and settling time that 4.7μF tantalum capacitors be placed within 0.5 inches of the supply pins.

Input Range

The noninverting input of the LT1223 looks like a 10M resistor in parallel with a 3pF capacitor until the common mode range is exceeded. The input impedance drops somewhat and the input current rises to about 10μA when the input comes too close to the supplies. Eventually, when the input exceeds the supply by one diode drop, the base collector junction of the input transistor forward biases and the input current rises dramatically. The input current should be limited to 10mA when exceeding the supplies. The amplifier will recover quickly when the input is returned to its normal common mode range unless the input was over 500mV beyond the supplies, then it will take an extra 100ns.

Offset Adjust

Output offset voltage is equal to the input offset voltage times the gain plus the inverting input bias current times the feedback resistor. For low gain applications (3 or less) a 10kΩ pot connected to pins 1 and 5 with wiper to V^+ will trim the inverting input current (±10μA) to null the output; it does not change the offset voltage very much. If the LT1223 is used in a high gain application, where input offset voltage is the dominate error, it can be nulled by pulling approximately 100μA from pin 1 or 5. The easy way to do this is to use a 10kΩ pot between pin 1 and 5 with a 150k resistor from the wiper to ground for 15V supply applications. Use a 47k resistor when operating on a 5V supply.

APPLICATIONS INFORMATION

Shutdown

Pin 8 activates a shutdown control function. Pulling more than 200μA from pin 8 drops the supply current to less than 3mA, and puts the output into a high impedance state. The easy way to force shutdown is to ground pin 8, using an open collector (drain) logic stage. An internal resistor limits current, allowing direct interfacing with no additional parts. When pin 8 is open, the LT1223 operates normally.

Slew Rate

The slew rate of a current feedback amplifier is not independent of the amplifier gain configuration the way it is in a traditional op amp. This is because the input stage and the output stage both have slew rate limitations. Inverting amplifiers do not slew the input and are therefore limited only by the output stage. High gain, noninverting amplifiers are similar. The input stage slew rate of the LT1223 is about 350V/μs before it becomes nonlinear and is enhanced by the normally reverse-biased emitters on the input transistors. The output slew rate depends on the size of the feedback resistors. The peak output slew rate is about 2000V/μs with a 1k feedback resistor and drops proportionally for larger values. At an output slew rate of 1000V/μs or more, the transistors in the “mirror circuits” will begin to saturate due to the large feedback currents. This causes the output to have slew induced overshoot and is somewhat unusual looking; it is in no way harmful or dangerous to the device. The photos show the LT1223 in a noninverting gain of three (R_F = 1k, R_G = 500Ω) with a 20V peak-to-peak output slewing at 500V/μs, 1000V/μs and 2000V/μs.

Output Slew Rate of 500V/μs

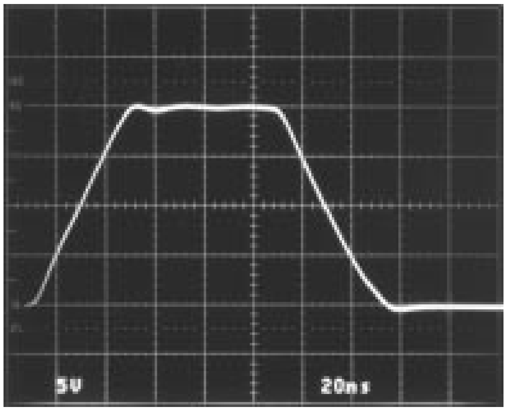

Output Slew Rate of 1000V/μs

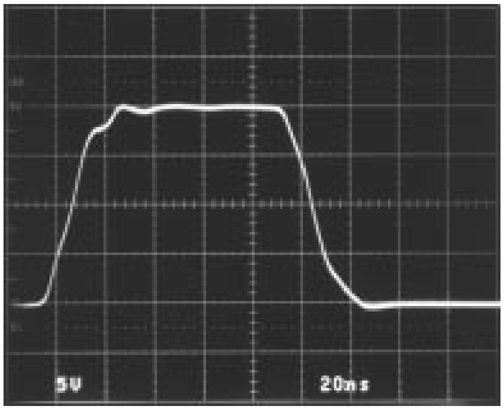

Output Slew Rate at 2000V/μs Shows Aberrations (See Text)

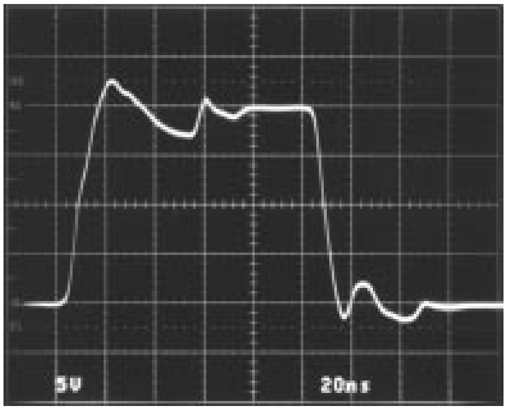

Settling Time

The Inverting Amplifier Settling Time versus Output Step curve shows that the LT1223 will settle to within 1mV of final value in less than 100ns for all output changes of 10V or less. When operated as an inverting amplifier there is less than 500μV of thermal settling in the amplifier. However, when operating the LT1223 as a noninverting amplifier, there is an additional thermal settling component that is about 200μV for every volt of input common mode change. So a noninverting gain of one amplifier will

APPLICATIONS INFORMATION

have about 2.5mV thermal tail on a 10V step. Unfortunately, reducing the input signal and increasing the gain always results in a thermal tail of about the same amount for a given output step. For this reason we show separate graphs of 10mV and 1mV non-inverting amplifier settling times. Just as the bandwidth of the LT1223 is fairly constant for various closed-loop gains, the settling time remains constant as well.

Adjustable Gain Amplifier

To make a variable gain amplifier with the LT1223, vary the value of R_G. The implementation of R_G can be a pot, a light controlled resistor, a FET, or any other low capacitance variable resistor. The value of R_F should not be varied to change the gain. If R_F is changed, then the bandwidth will be reduced at maximum gain and the circuit will oscillate when R_F is very small.

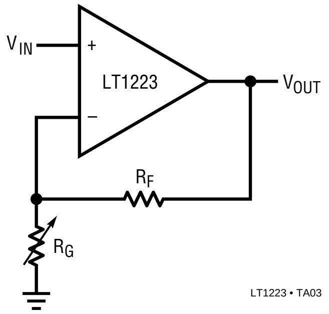

Adjustable Bandwidth Amplifier

Because the resistance at the inverting input determines the bandwidth of the LT1223, an adjustable bandwidth circuit can be made easily. The gain is set as before with R_F and R_G; the bandwidth is maximum when the variable resistor is at a minimum.

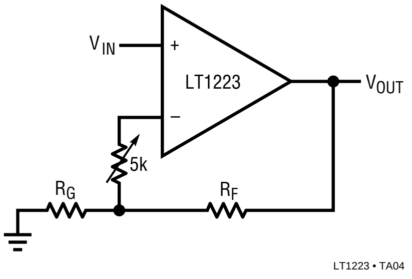

Accurate Bandwidth Limiting The LT1223

It is very common to limit the bandwidth of an op amp by putting a small capacitor in parallel with R_F. DO NOT PUT A SMALL CAPACITOR FROM THE INVERTING INPUT OF A CURRENT FEEDBACK AMPLIFIER TO ANYWHERE ELSE, ESPECIALLY NOT TO THE OUTPUT. The capacitor on the inverting input will cause peaking or oscillations. If you need to limit the bandwidth of a current feedback amplifier, use a resistor and capacitor at the noninverting input (R1 & C1). This technique will also cancel (to a degree) the peaking caused by stray capacitance at the inverting input. Unfortunately, this will not limit the output noise the way it does for the op amp.

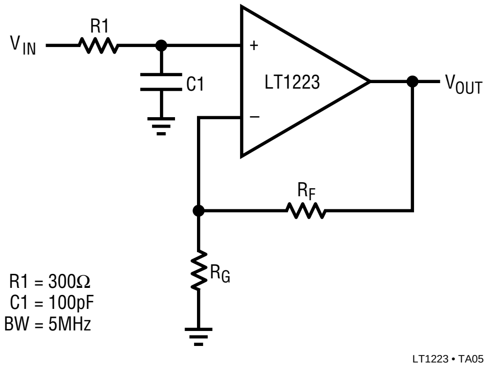

Current Feedback Amplifier Integrator

Since we remember that the inverting input wants to see a resistor, we can add one to the standard integrator circuit. This generates a new summing node where we can apply capacitive feedback. The LT1223 integrator has excellent large signal capability and accurate phase shift at high frequencies.

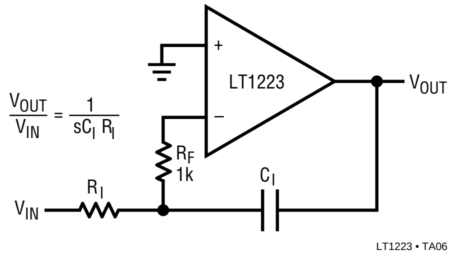

APPLICATIONS INFORMATION

Summing Amplifier (DC Accurate)

The summing amplifier is easily made by adding additional inputs to the basic inverting amplifier configuration. The LT1223 has no I_{OS} spec because there is no correlation between the two input bias currents. Therefore, we will not improve the DC accuracy of the inverting amplifier by putting in the extra resistor in the noninverting input.

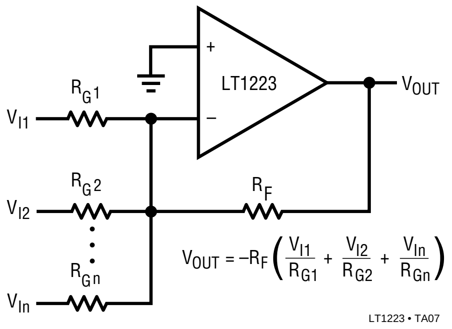
+
−
LT1223
V_{OUT}
R_{G1}
V_{I1}
R_{G2}
V_{I2}
R_F
R_{Gn}
V_{In}
$V_{OUT} = -R_F\left(\frac{V_{I1}}{R_{G1}} + \frac{V_{I2}}{R_{G2}} + \frac{V_{In}}{R_{Gn}}\right)$
LT1223 • TA07

Difference Amplifier

The LT1223 difference amplifier delivers excellent performance if the source impedance is very low. This is because the common mode input resistance is only equal to $R_F + R_G$.

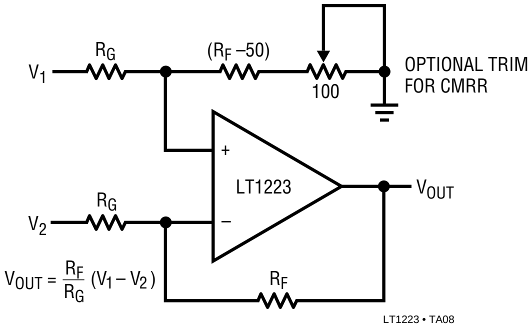
V_1
R_G
$(R_F - 50)$
100
OPTIONAL TRIM
FOR CMRR
+
−
LT1223
V_{OUT}
V_2
R_G
$V_{OUT} = \frac{R_F}{R_G}(V_1 - V_2)$
R_F
LT1223 • TA08

Video Instrumentation Amplifier

This instrumentation amplifier uses two LT1223s to increase the input resistance to well over 1M. This makes an excellent "loop through" or cable sensing amplifier if the inverting input (A1) senses the shield and the non-inverting input (A2) senses the center conductor. Since this amplifier does not load the cable (take care to minimize stray capacitance) and it rejects common mode hum and noise, several amplifiers can sense the signal with only one termination at the end of the cable. The design equations are simple. Just select the gain you need (it should be two or more) and the value of the feedback resistor (typically 1k) and calculate R_{G1} and R_{G2}. The gain can be tweaked with R_{G2} and the CMRR with R_{G1} if needed. The bandwidth of the noninverting input signal is not reduced by the presence of the other amplifier, however, the inverting input signal bandwidth is reduced since it passes two amplifiers. The CMRR is good at high frequencies because the bandwidth of the amplifiers are about the same even though they do not necessarily operate at the same gain.

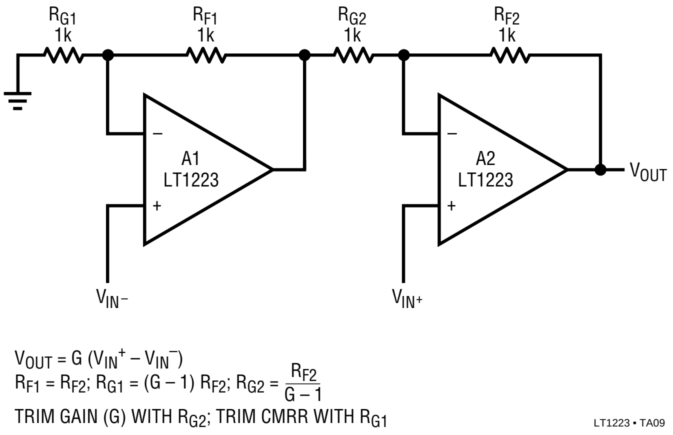
R_{G1}
1k
R_{F1}
1k
R_{G2}
1k
R_{F2}
1k
−
+
A1
LT1223
−
+
A2
LT1223
V_{OUT}
V_{IN^-}
V_{IN^+}
$V_{OUT} = G\,(V_{IN}^+ - V_{IN}^-)$
$R_{F1} = R_{F2};\ R_{G1} = (G-1)\,R_{F2};\ R_{G2} = \frac{R_{F2}}{G-1}$
TRIM GAIN (G) WITH R_{G2}; TRIM CMRR WITH R_{G1}
LT1223 • TA09

Cable Driver

The cable driver circuit is shown on the front page. When driving a cable it is important to properly terminate both ends if even modest high frequency performance is required. The additional advantage of this is that it isolates the capacitive load of the cable from the amplifier so it can operate at maximum bandwidth.

TYPICAL APPLICATION

150mA Output Current Video Amp

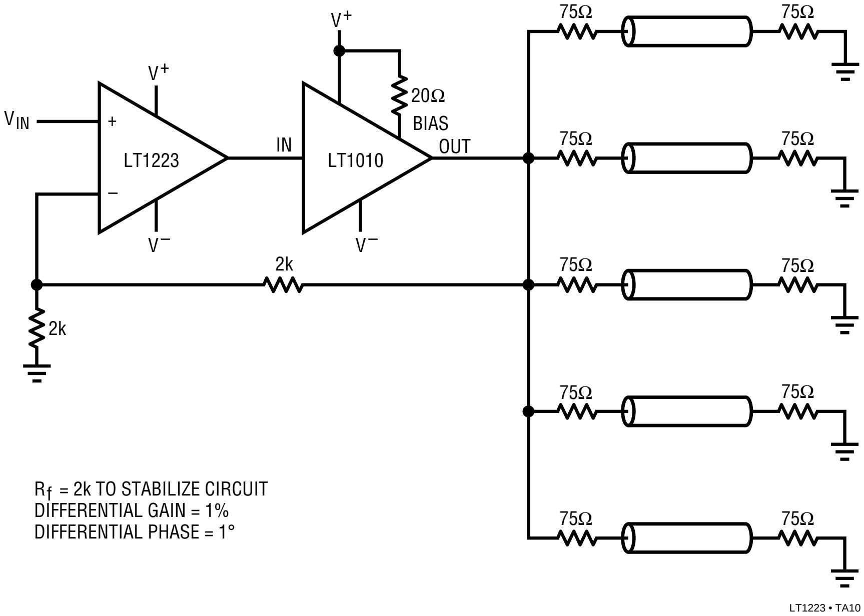
V+
V+
VIN
+
–
LT1223
V–
IN
LT1010
20Ω
BIAS
OUT
V–
2k
2k
75Ω
75Ω
75Ω
75Ω
75Ω
75Ω
75Ω
75Ω
75Ω
75Ω
R_f = 2k TO STABILIZE CIRCUIT
DIFFERENTIAL GAIN = 1%
DIFFERENTIAL PHASE = 1°
LT1223 • TA10

SIMPLIFIED SCHEMATIC

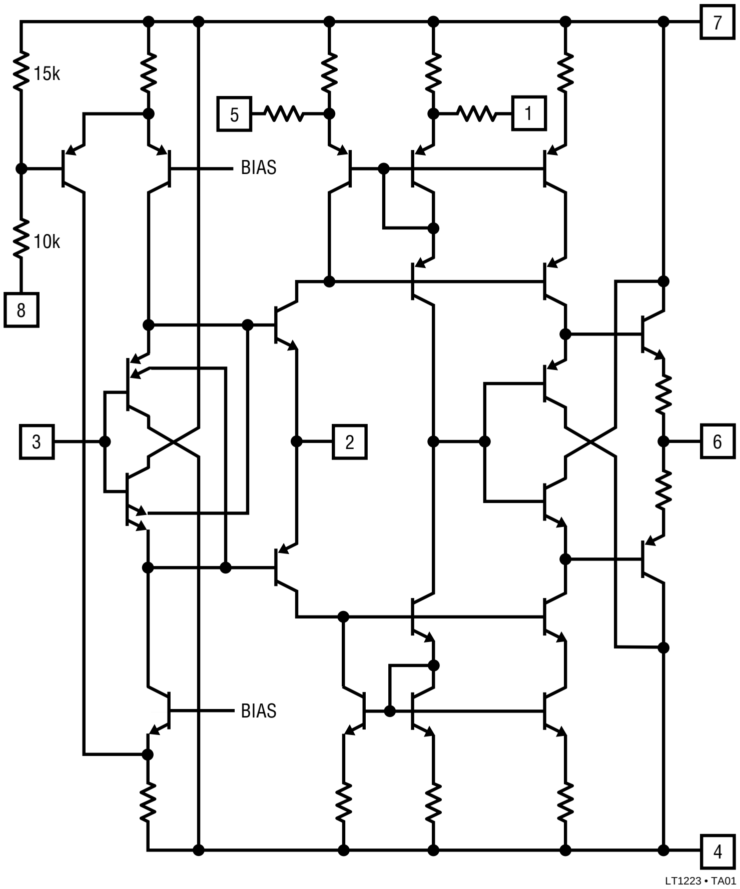
7
15k
5
1
BIAS
10k
8
3
2
6
BIAS
4
LT1223 • TA01

Information furnished by Linear Technology Corporation is believed to be accurate and reliable. However, no responsibility is assumed for its use. Linear Technology Corporation makes no representation that the interconnection of its circuits as described herein will not infringe on existing patent rights.

PACKAGE DESCRIPTION

Dimensions in inches (millimeters) unless otherwise noted.

J8 Package
8-Lead Ceramic DIP

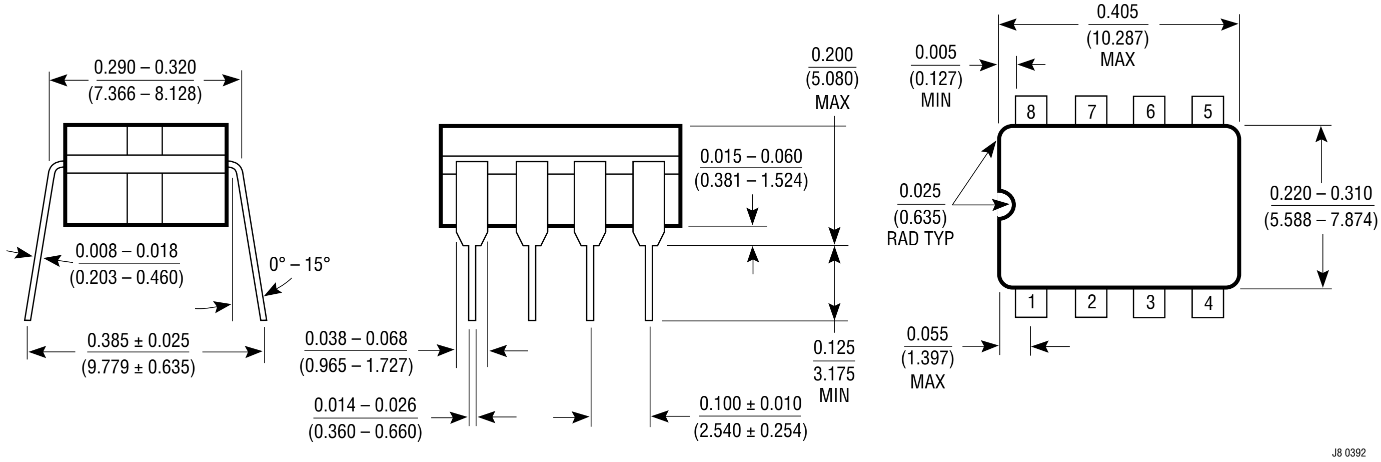
0.290 – 0.320
(7.366 – 8.128)
0.008 – 0.018
(0.203 – 0.460)
0° – 15°
0.385 ± 0.025
(9.779 ± 0.635)
0.200
(5.080)
MAX
0.015 – 0.060
(0.381 – 1.524)
0.038 – 0.068
(0.965 – 1.727)
0.125
3.175
MIN
0.014 – 0.026
(0.360 – 0.660)
0.100 ± 0.010
(2.540 ± 0.254)
0.405
(10.287)
MAX
0.005
(0.127)
MIN
8
7
6
5
0.025
(0.635)
RAD TYP
0.220 – 0.310
(5.588 – 7.874)
1
2
3
4
0.055
(1.397)
MAX
J8 0392

N8 Package
8-Lead Plastic DIP

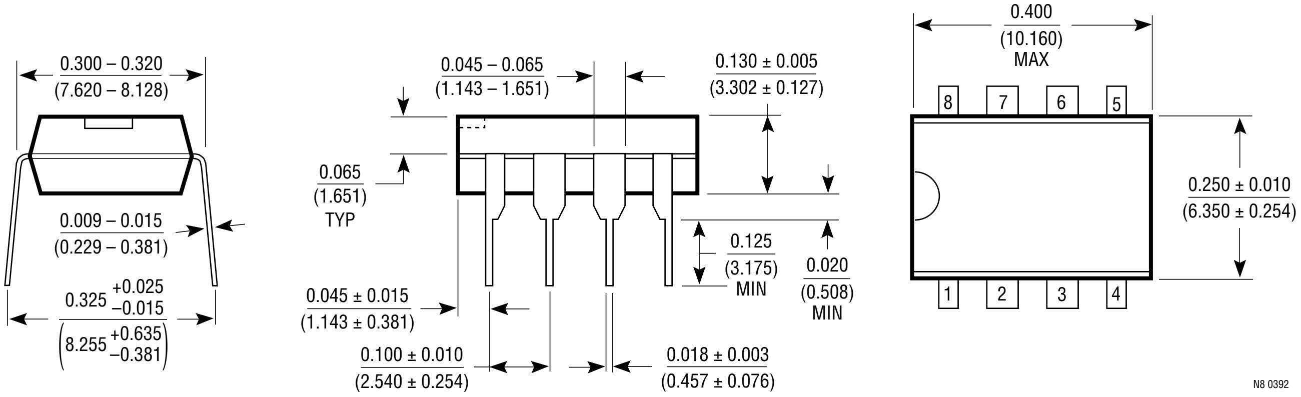
0.300 – 0.320
(7.620 – 8.128)
0.009 – 0.015
(0.229 – 0.381)
0.325 +0.025 –0.015
(8.255 +0.635 –0.381)
0.045 – 0.065
(1.143 – 1.651)
0.130 ± 0.005
(3.302 ± 0.127)
0.065
(1.651)
TYP
0.125
(3.175)
MIN
0.020
(0.508)
MIN
0.045 ± 0.015
(1.143 ± 0.381)
0.100 ± 0.010
(2.540 ± 0.254)
0.018 ± 0.003
(0.457 ± 0.076)
0.400
(10.160)
MAX
8
7
6
5
0.250 ± 0.010
(6.350 ± 0.254)
1
2
3
4
N8 0392

S8 Package
8-Lead Plastic SOIC

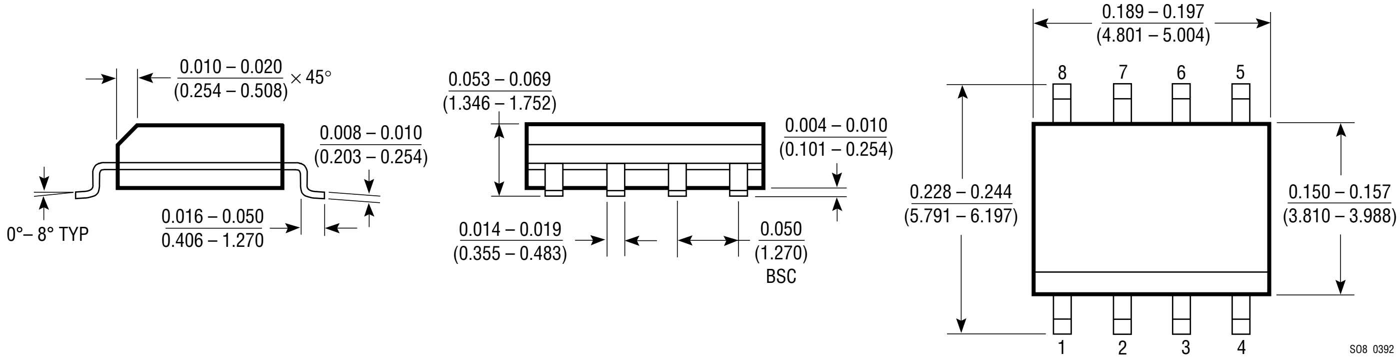
0.010 – 0.020
(0.254 – 0.508)
× 45°
0.008 – 0.010
(0.203 – 0.254)
0°– 8° TYP
0.016 – 0.050
0.406 – 1.270
0.053 – 0.069
(1.346 – 1.752)
0.004 – 0.010
(0.101 – 0.254)
0.014 – 0.019
(0.355 – 0.483)
0.050
(1.270)
BSC
0.189 – 0.197
(4.801 – 5.004)
8
7
6
5
0.228 – 0.244
(5.791 – 6.197)
0.150 – 0.157
(3.810 – 3.988)
1
2
3
4
SO8 0392

LT/GP 1092 5K REV A

© LINEAR TECHNOLOGY CORPORATION 1992