6-channel BTL driver for CD players

BA5936S

The BA5936S is a 6-channel BTL driver developed for use as the sled motor, spindle motor, actuator, and loading motor driver for CD players. It contains a current limiting function and 5V regulator for compatibility in a wide range of applications.

●Applications

CD players

●Features

1) 6-channel BTL driver for CD players. Contains 4 channels for the focus coil, tracking coil, sled motor, and spindle motor drives; and 2 channels for the loading motor driver.
2) Internal 5V regulator with a earth protection circuit (requires an external PNP transistor).
3) Internal mute circuit (enables the muting of the driver outputs from all but the loading driver, and muting of the regulator output).
4) Internal thermal shutdown circuit.

●Absolute maximum ratings (Ta = 25°C)

Parameter	Symbol	Limits	Unit
Power supply voltage	V_{CC}	13.5	V
Power dissipation	Pd	1.7 *1	W
Operating temperature	Topr	−35～+85	℃
Storage temperature	Tstg	−55～+150	℃

*1 When isolated.
Reduced by 13.6mW for each increase in Ta of 1℃ over 25℃.
*2 When not used as regulator, there is problem with pins 9, 10, and 11 being open.

●Recommended operating conditions (Ta = 25°C)

Parameter	Symbol	Limits	Unit
Power supply voltage	V_{CC}	6～13.2	V

* When not used as regulator, 4.5 to 13.2V.

Downloaded from Elcodis.com electronic components distributor

●Block diagram

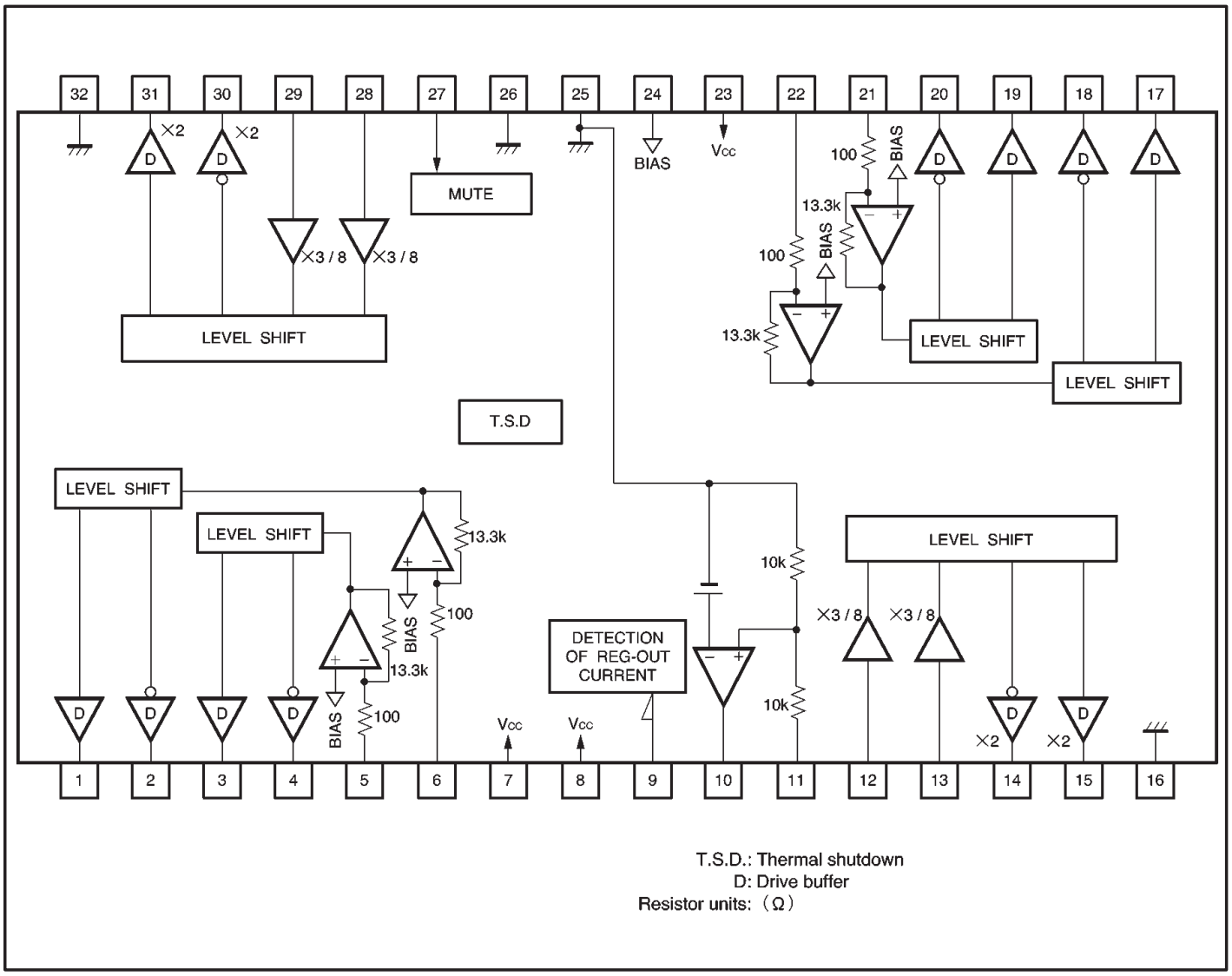

Downloaded from Elcodis.com electronic components distributor

●Pin descriptions

Pin No.	Pin name	Function	Pin No.	Pin name	Function
1	OUT1−	Channel 1 negative output	17	OUT4−	Channel 4 negative output
2	OUT1+	Channel 1 positive output	18	OUT4+	Channel 4 positive output
3	OUT2−	Channel 2 negative output	19	OUT5−	Channel 5 negative output
4	OUT2+	Channel 2 positive output	20	OUT5+	Channel 5 positive output
5	IN2	Channel 2 input	21	IN5	Channel 5 input
6	IN1	Channel 1 input	22	IN4	Channel 4 input
7	Vcc	Vcc	23	Vcc	Vcc
8	Vcc	Vcc	24	BIAS IN	Bias input
9	REG-I	Regulator current detector	25	GND	GND
10	REG-B	For connection to base of external transistor	26	GND	GND
11	REG OUT	Constant voltage output (connected to collector of external transistor)	27	MUTE IN	Mute input
			28	IN6-R	Channel 6 reverse input
12	IN3-R	Channel 3 reverse input	29	IN6-F	Channel 6 forward input
13	IN3-F	Channel 3 forward input	30	OUT6+	Channel 6 positive output
14	OUT3+	Channel 3 positive output	31	OUT6−	Channel 6 negative output
15	OUT3−	Channel 3 negative output	32	GND	GND
16	GND	GND			

Note 1: Positive output and negative output are the polarities with respect to the input.
Note 2: Loading positive output and loading negative output are the polarities with respect the mode.

●Input / output circuits

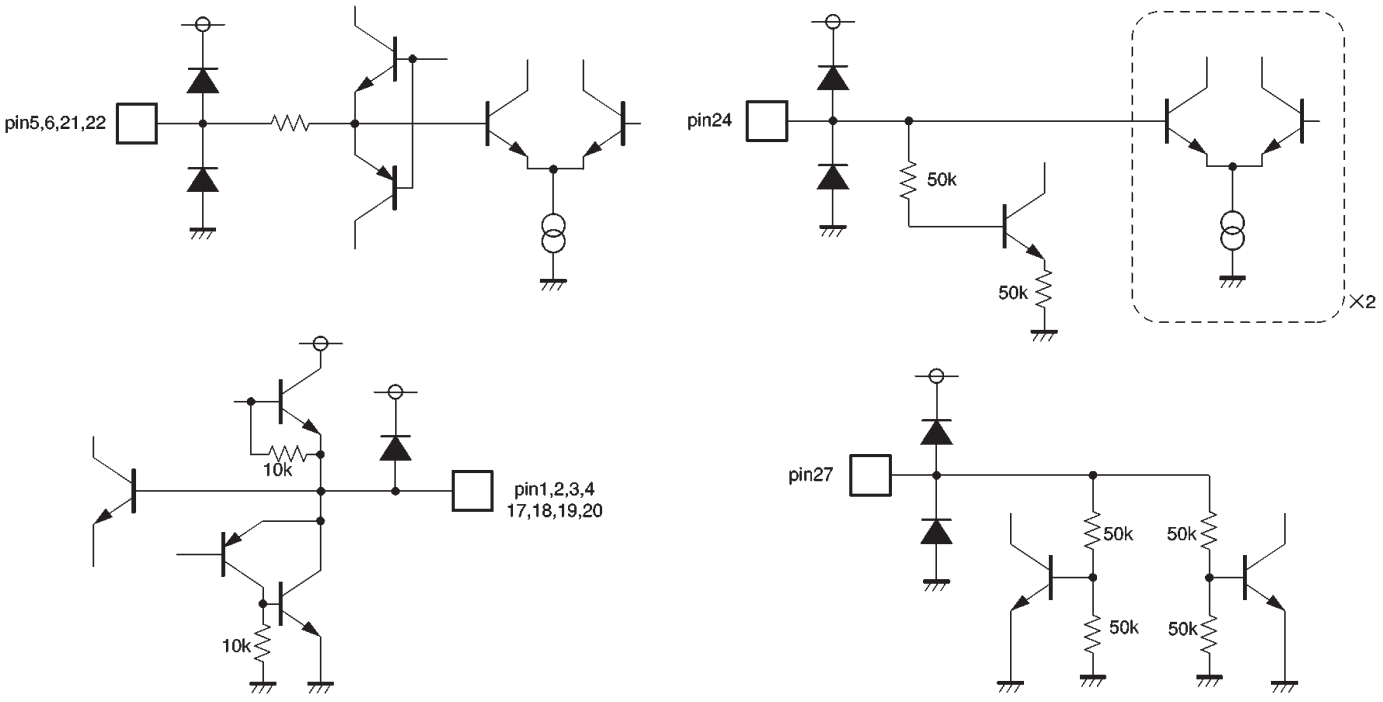

Downloaded from Elcodis.com electronic components distributor

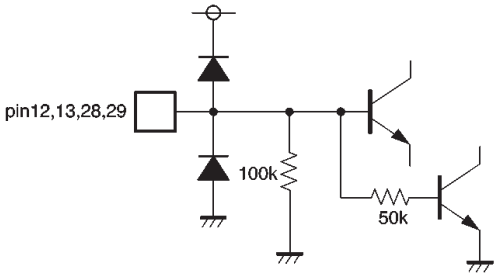

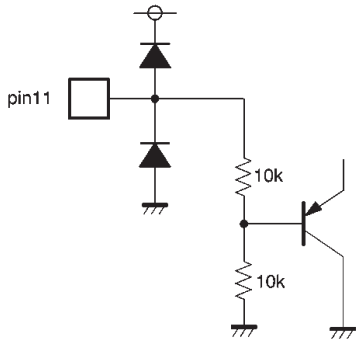

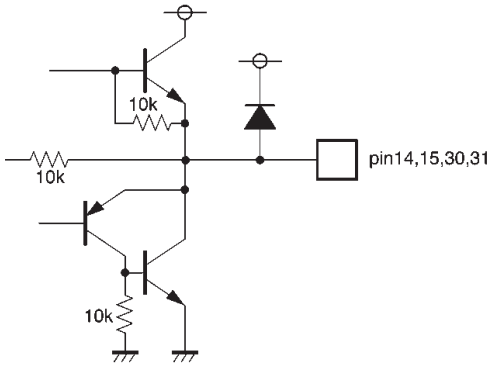

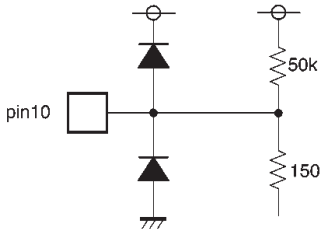

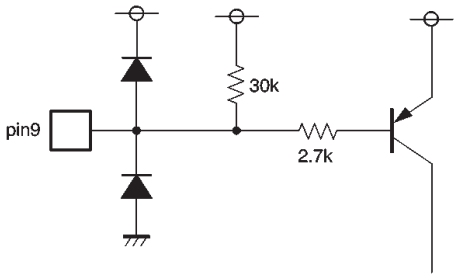

Downloaded from Elcodis.com electronic components distributor

●Electrical characteristics (unless otherwise noted, Ta = 25°C, V_{CC} = 8V, R_{IN} = 10kΩ, R_L = 8Ω, VBIAS = 2.5V)

Parameter	Symbol	Min.	Typ.	Max.	Unit	Conditions
Circuit current	I_{CC}	—	13	17	mA	No load
〈All drivers except the loading driver〉						
Output offset voltage	VOO	−50	—	50	mV	—
Maximum output pin-to-pin voltage	VOH	4.0	4.8	—	V	VBIAS=4V, V_{IN}=VBIAS±4V
Closed-loop voltage gain	GVC	6.0	8.0	10.0	dB	V_{IN}=VBIAS±0.5V
Ripple rejection	RR	—	60	—	dB	V_{IN}=0.1Vrms, 100Hz
Slew rate	SR	—	1.0	—	V / μs	100Hz rectangular wave, $3V_{P-P}$ output
Mute on voltage	VMON	—	—	0.5	V	—
Mute off voltage	VMOFF	2.0	—	—	V	—
〈Loading driver〉						
Voltage between outputs F	VOF	2.5	2.9	3.3	V	VFO=2V, VRE=0V
Voltage between outputs R	VOR	−3.3	−2.9	−2.5	V	VFO=0V, VRE=2V
Output voltage range F	VOMF	5.2	5.7	—	V	VFO=5V, VRE=0V
Output voltage range R	VOMR	—	−5.7	−5.2	V	VFO=0V, VRE=5V
Output load regulation F	ΔVF	—	100	500	mV	VFO=3V, VRE=0V
Output load regulation R	ΔVR	—	100	500	mV	I=100→400mA
Output offset voltage	VOOL	−50	—	50	mV	During braking; voltage between outputs
Forward input current	IFO	—	—	500	μA	VFO=5V, VRE=0V
Reverse input current	IRE	—	—	500	μA	VFO=0V, VRE=5V
〈Regulator〉						
Output voltage	Vreg	4.75	5.00	5.25	V	I_L=100mA
Output load regulation	ΔVRL	−50	0	10	mV	I_L=0～200mA
Power supply voltage regulation	ΔV_{CC}	−15	21	60	mV	V_{CC}=6～13.2V, I_L=100mA
Base drive current when grounded	Ireg-B	220	350	480	μA	I_L=0mA
Current detection threshold voltage	Vreg-I	540	675	810	mV	—

◎Not designed for radiation resistance.

Downloaded from Elcodis.com electronic components distributor

●Measurement circuit

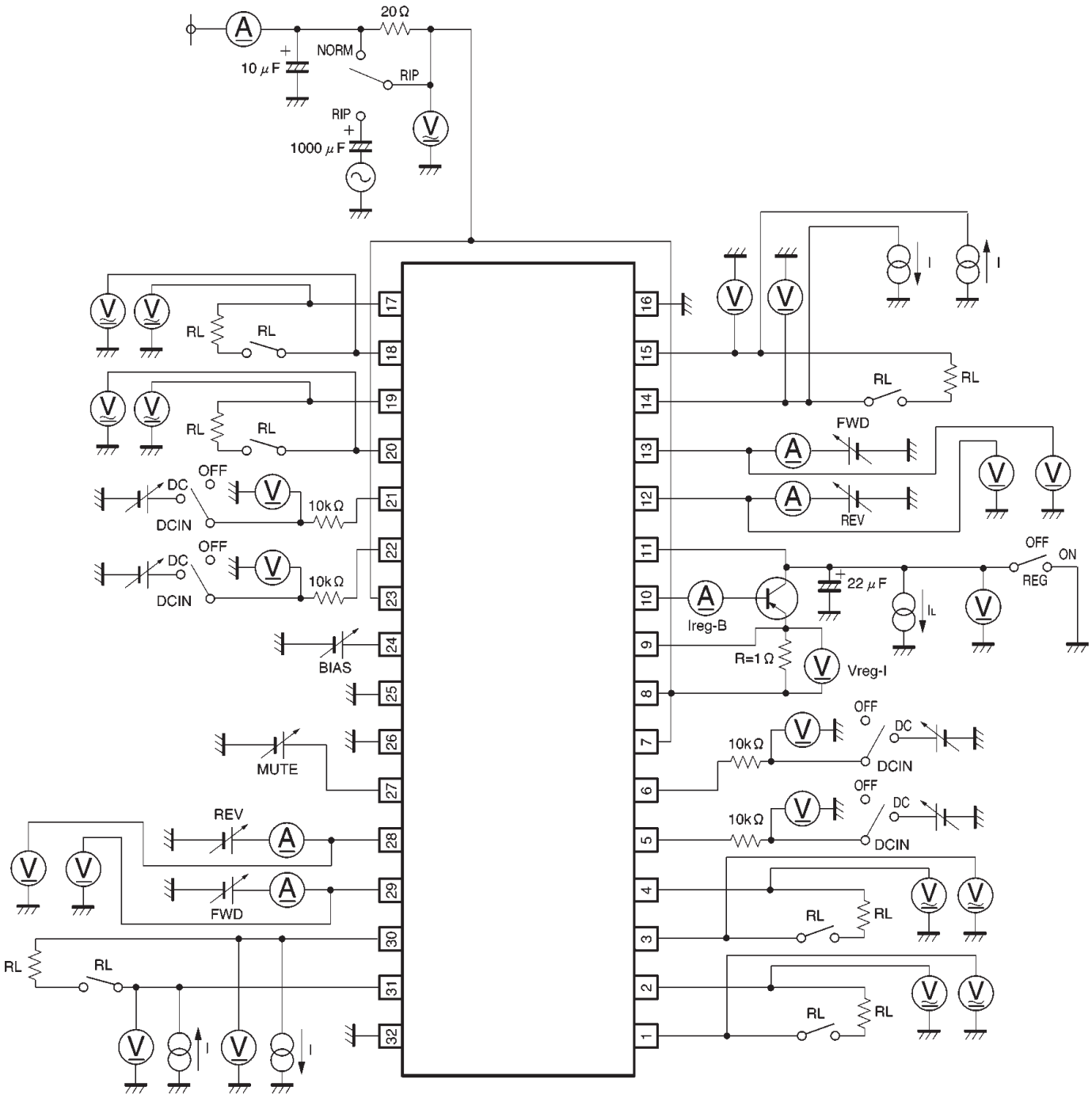

Fig.1

Downloaded from Elcodis.com electronic components distributor

●Application example

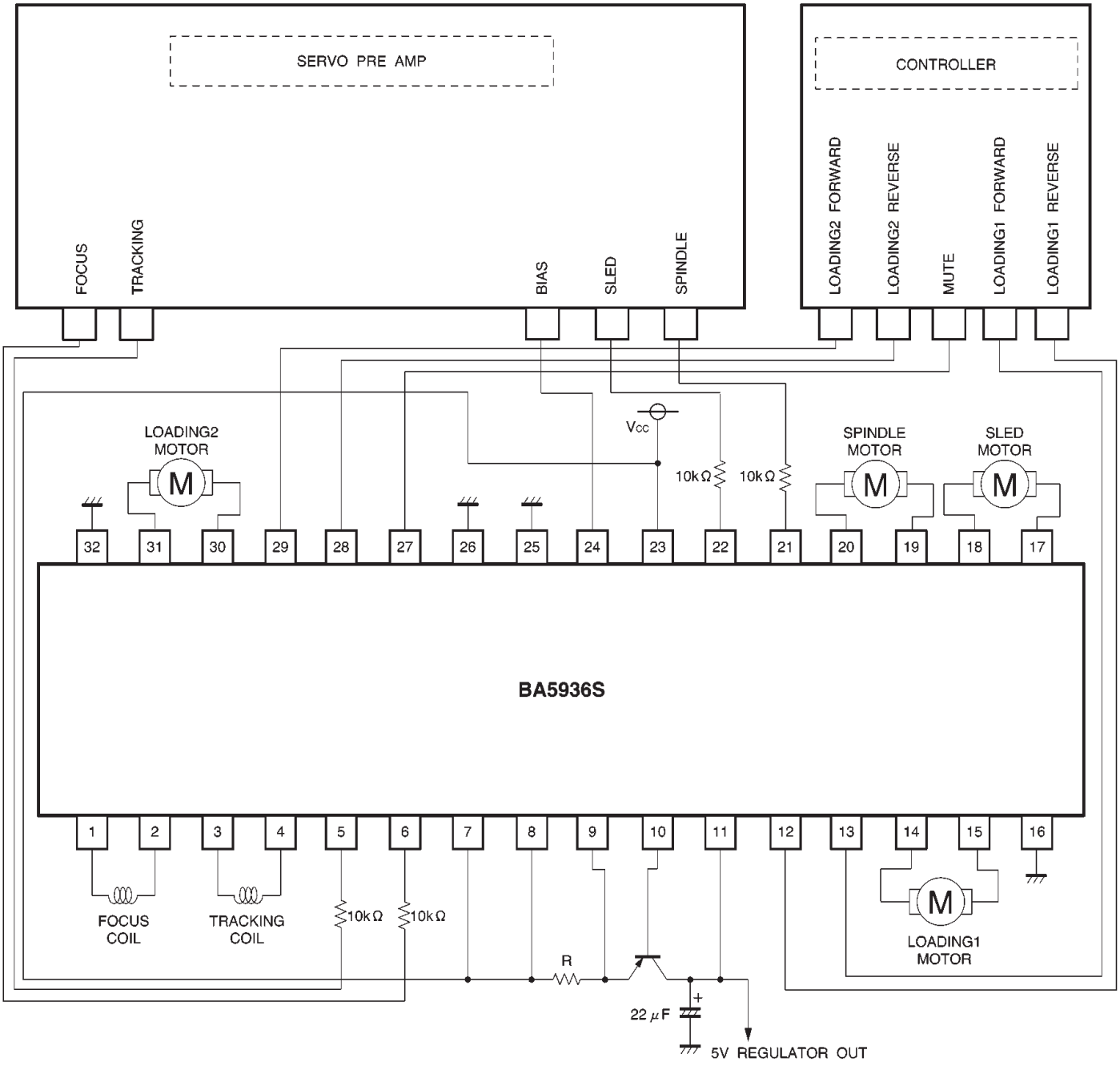

Fig.2

Downloaded from Elcodis.com electronic components distributor

●Operation notes

(1) Output mode switch for loading motor driver
(V_{CC} = 8V)

FWD	REV	Loading output
L	L	Brake
	H	Reverse (V_O=1.5×VRE)
H	L	Forward (V_O=1.5×VFO)
	H	(V_O=1.5×(VFO−VRE)

Note: The low level voltage (L) is set to that L<VF (approx. 0.6V).
Loading driver gain is 3.5dB.

(2) Loading motor driver voltage setting
(ex: forward mode)

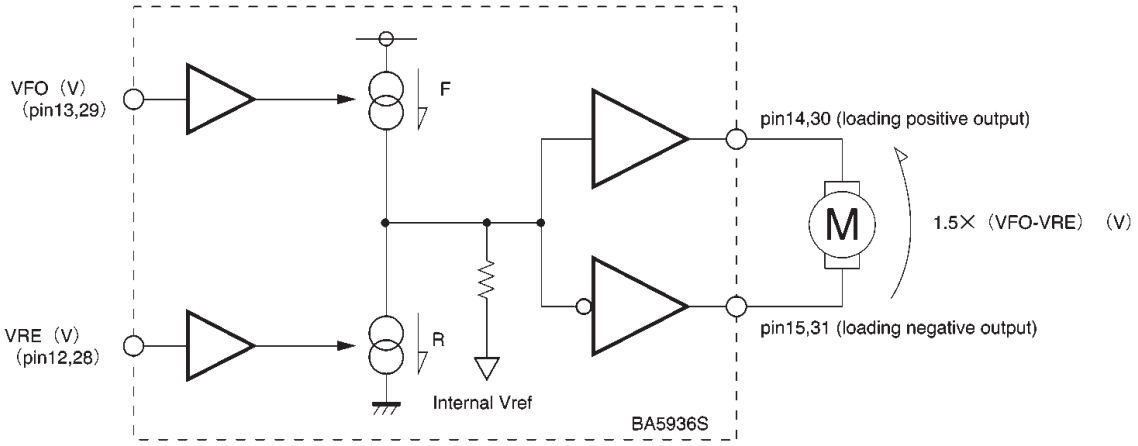

When VFO < VF (approx. 0.6V), VFO=0V
When VRE < VF (approx. 0.6V), VRE=0V

(3) The BA5936S contains a thermal shutdown circuit. When the chip temperature reaches 175°C (Typ.), the output current is muted.
If the chip temperature then drops below 150°C (Typ.), then the mute is released.

(4) By having the mute pin (pin 27) voltage open or lowered to 0.5V or below, the output currents (channels 1, 2, 4, and 5, and regulator) can be muted.
For normal conditions, have the voltage at pin 27 pull-up to 2V.

(5) If the voltage of the bias pin (pin 24) drops below 1.4V (Typ.), the drivers (channels 1, 2, 4, and 5) are muted. For normal conditions, have the voltage at 1.6V or greater.

Downloaded from Elcodis.com electronic components distributor

(6) If the voltage of the thermal shutdown or bias pin drops, the mute is activated; however, in both these situations, only the drivers and regulator are muted. Also, the output pin voltage becomes the internal bias voltage (approx. (V_{CC} – VF) / 2 [for channels 1, 2, 4, and 5], V_{CC} / 2 [for channels 3 and 6]).

= Supplement =

Various mute function and corresponding driver and regulator operating conditions

	ch1, 2, 4, 5	ch3, 6	Regulator
Mute	STOP	ACT	STOP
Bias-drop mute	STOP	ACT	ACT
Thermal shutdown	STOP	STOP	ACT

(7) Connect a bypass capacitor (approx. 0.1µF) between the bases of the power supply pins of this IC.

(8) The regulator characteristics are explained below. The limiting current and ground current can be set by changing the external current limiting resistor and external PNP transistor hfe.

∗ Do not use loads that will change the regulator load characteristics and regulator current limiting characteristics. Doing so may cause start-up malfunctions.

(9) The application example will assure excellent results, but nevertheless, be sure to carefully check all characteristics during use. During use with constants in the external circuitry modified, be sure to leave a sufficient margin in order to take into consideration fluctuations in the static and transient characteristics of the external components and this IC.

Also, be aware that ROHM has not sufficiently performed all confirmations regarding patent rights.

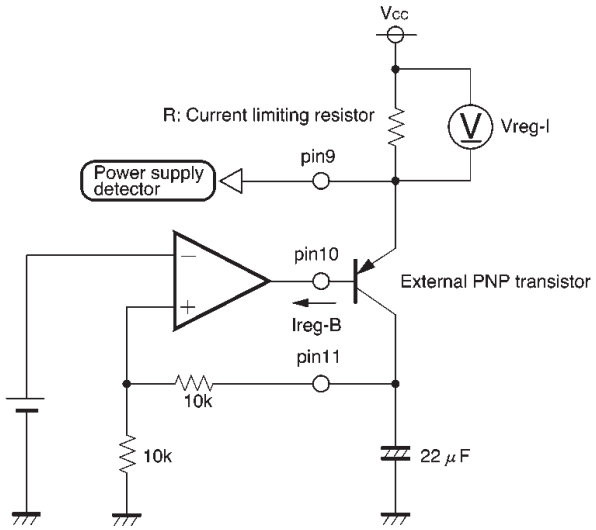

Fig.3 Regulator peripheral circuit

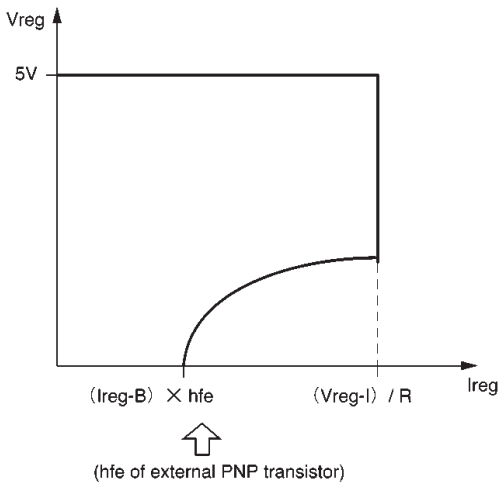

Fig.4 Regulator current limiting characteristics

Downloaded from Elcodis.com electronic components distributor

●Electrical characteristic curves

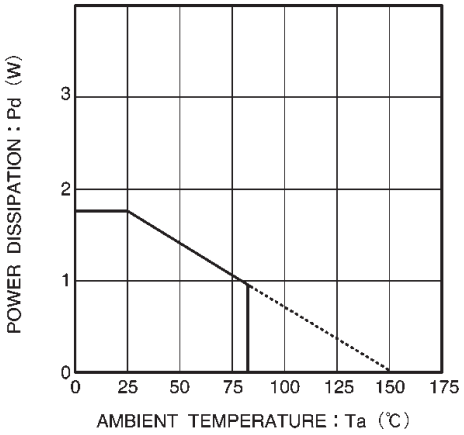

Fig.5 Thermal derating curve

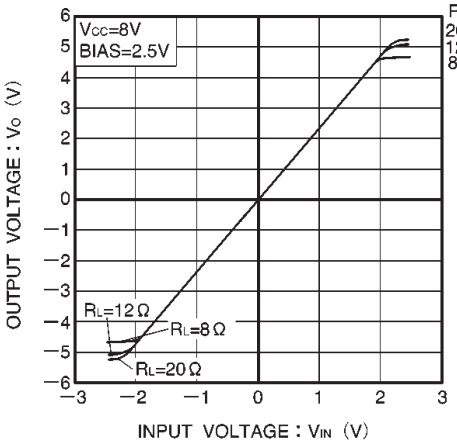

Fig.6 Driver I / O characteristics (channels 1, 2, 4, and 5)

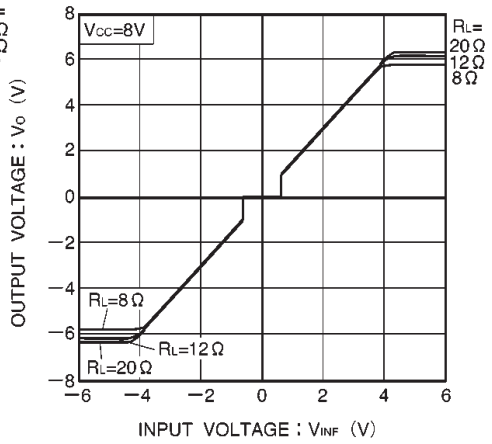

Fig.7 Loading driver I / O characteristics (channels 3 and 6)

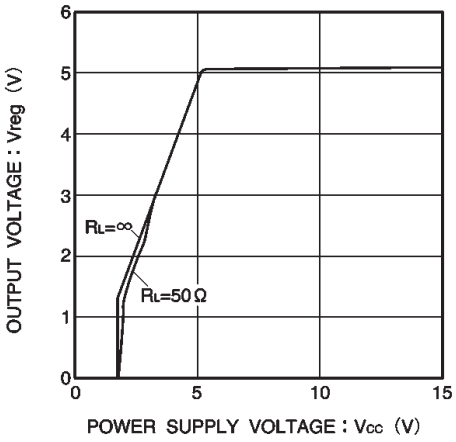

Fig.8 Regulator output voltage vs. power supply voltage

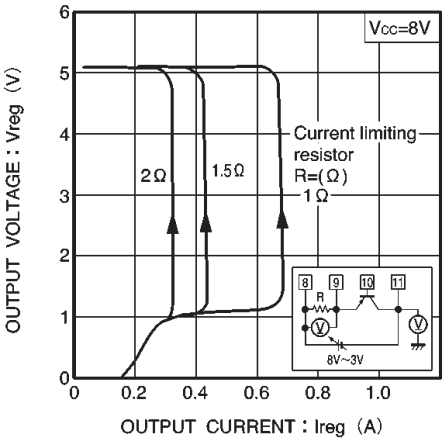

Fig.9 Regulator output voltage vs. regulator output current

●External dimensions (Units: mm)

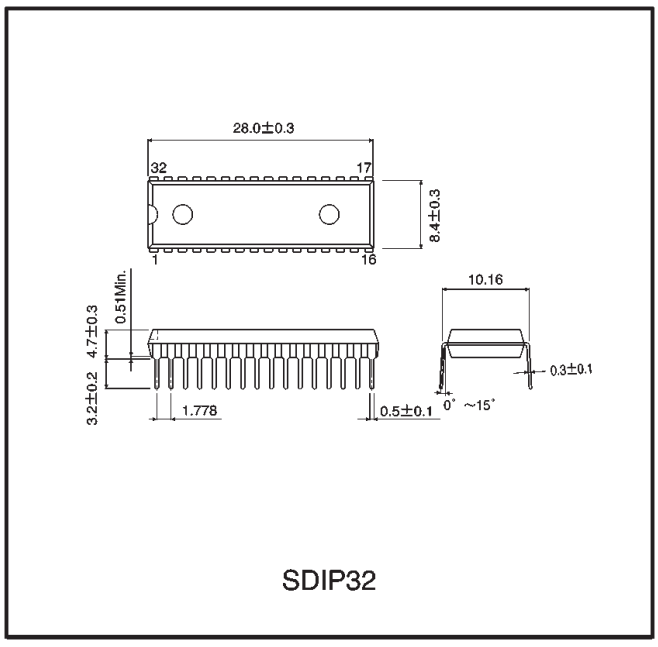

SDIP32

Downloaded from Elcodis.com electronic components distributor