National Semiconductor

DS1489/DS1489A

OBSOLETE
July 14, 2010

Quad Line Receiver

General Description

The DS1489/DS1489A are quad line receivers designed to interface data terminal equipment with data communications equipment. They are constructed on a single monolithic silicon chip. These devices satisfy the specifications of EIA Standard RS-232D. The DS1489/DS1489A meet and exceed the specifications of MC1489/MC1489A and are pin-for-pin replacements.

Features

- Four separate receivers per package
- Programmable threshold
- Built-in input threshold hysteresis
- "Fail safe" operating mode: high output for open inputs
- Inputs withstand ±30V

Schematic and Connection Diagrams

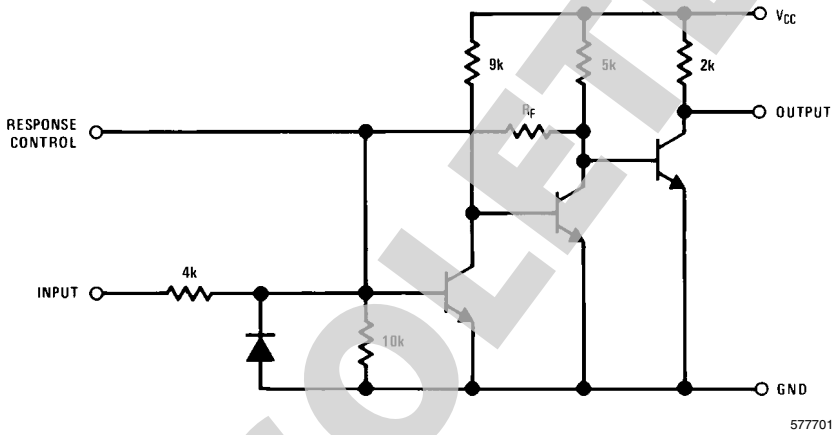

(¼ of unit shown)
DS1489: R_F = 10k
DS1489A: R_F = 2k

Dual-In-Line or Small-Out Line Package

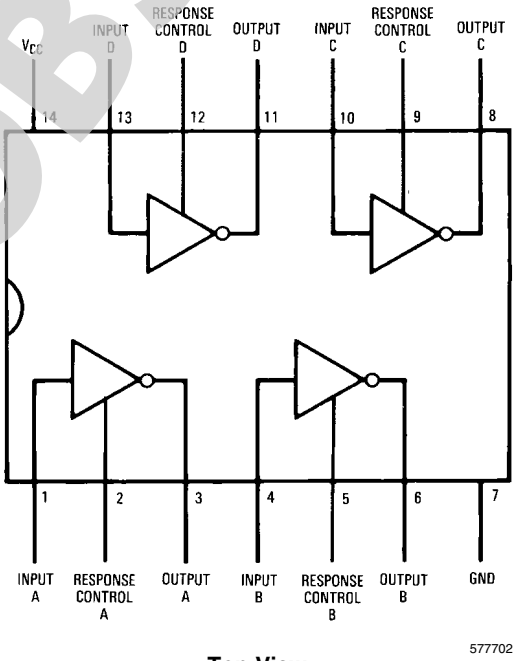

Top View
Order Number DS1489M, DS1489MX, DS1489N, DS1489AM, DS1489AMX or DS1489AN
See NS Package Number M14A or N14A

OBSOLETE

© 2010 National Semiconductor Corporation 5777

5777 Version 6 Revision 4 Print Date/Time: 2010/07/14 11:50:11

Downloaded from Elcodis.com electronic components distributor

AC Test Circuit and Voltage Waveforms

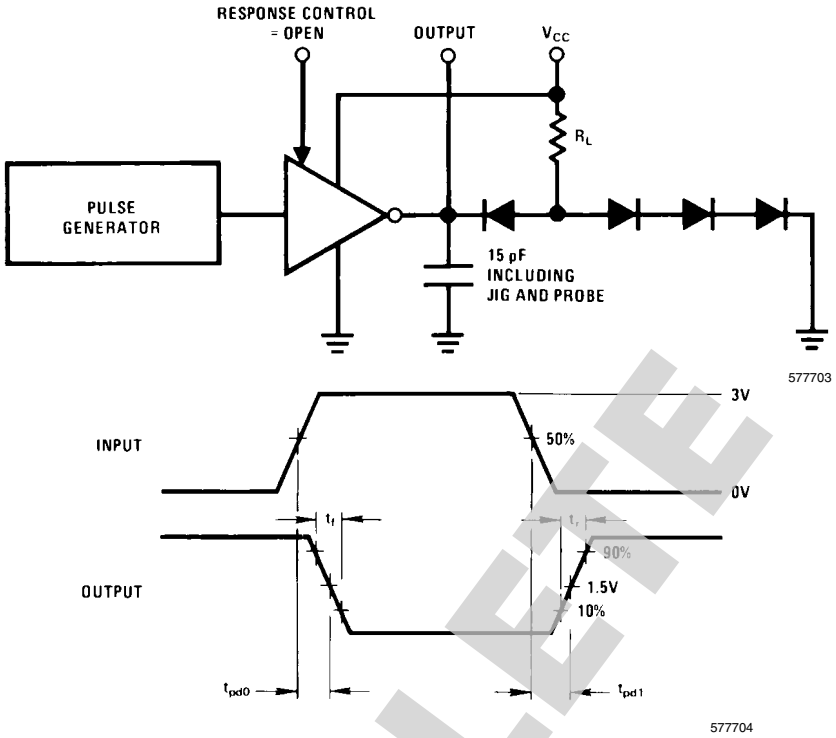

FIGURE 1.

OBSOLETE

5777 Version 6 Revision 4 Print Date/Time: 2010/07/14 11:50:11

Downloaded from Elcodis.com electronic components distributor

Absolute Maximum Ratings (*Note 2*)

If Military/Aerospace specified devices are required, please contact the National Semiconductor Sales Office/ Distributors for availability and specifications.

Power Supply Voltage	10V
Input Voltage Range	±30V
Output Load Current	20 mA
Power Dissipation (*Note 3*)	1W
Operating Temperature Range	0°C to +75°C
Storage Temperature Range	−65°C to +150°C
Maximum Power Dissipation (*Note 1*) at 25°C	
Molded DIP Package	1207 mW
SO Package	1042 mW
Lead Temperature (Soldering, 4 sec.)	260°C

Note 1: Derate molded DIP package 9.7 mW/°C above 25°C; derate SO package 8.33 mW/°C above 25°C.

Electrical Characteristics (*Note 3*, *Note 4*, *Note 5*)

DS1489/DS1489A: The following apply for V_{CC} = 5.0V ±1%, 0°C ≤ T_A ≤ +75°C unless otherwise specified.

Symbol	Parameter	Conditions			Min	Typ	Max	Units
V_{TH}	Input High Threshold Voltage	V_{OUT} ≤ 0.45V, I_{OUT} = 10 mA	DS1489	T_A = 25°C	1.0	1.25	1.5	V
					0.9		1.6	V
			DS1489A	T_A = 25°C	1.75	2.00	2.25	V
					1.55		2.40	V
V_{TL}	Input Low Threshold Voltage	V_{OUT} ≥ 2.5V, I_{OUT} = −0.5 mA		T_A = 25°C	0.75	1.00	1.25	V
					0.65		1.35	V
I_{IN}	Input Current	V_{IN} = +25V			+3.6	+5.6	+8.3	mA
		V_{IN} = −25V			−3.6	−5.6	−8.3	mA
		V_{IN} = +3V			+0.43	+0.53		mA
		V_{IN} = −3V			−0.43	−0.53		mA
V_{OH}	Output High Voltage	I_{OUT} = −0.5 mA	V_{IN} = 0.75V		2.6	3.8	5.0	V
			Input = Open		2.6	3.8	5.0	V
V_{OL}	Output Low Voltage	V_{IN} = 3.0V, I_{OUT} = 10 mA				0.33	0.45	V
I_{SC}	Output Short Circuit Current	V_{IN} = 0.75V				−3.0		mA
I_{CC}	Supply Current	V_{IN} = 5.0V				14	26	mA
P_d	Power Dissipation	V_{IN} = 5.0V				70	130	mW

Switching Characteristics

V_{CC} = 5V, T_A = 25°C

Symbol	Parameter	Conditions	Min	Typ	Max	Units
t_{pd1}	Input to Output "High" Propagation Delay	R_L = 3.9k, (*Figure 1*) (AC Test Circuit)		28	85	ns
t_{pd0}	Input to Output "Low" Propagation Delay	R_L = 390Ω, (*Figure 1*) (AC Test Circuit)		20	50	ns
t_r	Output Rise Time	R_L = 3.9k, (*Figure 1*) (AC Test Circuit)		110	175	ns
t_f	Output Fall Time	R_L = 390Ω, (*Figure 1*) (AC Test Circuit)		9	20	ns

Note 2: "Absolute Maximum Ratings" are those values beyond which the safety of the device cannot be guaranteed. Except for "Operating Temperature Range" they are not meant to imply that the devices should be operated at these limits. The table of "Electrical Characteristics" provides conditions for actual device operation.

Note 3: Unless otherwise specified min/max limits apply across the 0°C to +75°C temperature range for the DS1489 and DS1489A.

Note 4: All currents into device pins shown as positive, out of device pins as negative, all voltages referenced to ground unless otherwise noted. All values shown as max or min on absolute value basis.

Note 5: These specifications apply for response control pin = open.

OBSOLETE

5777 Version 6 Revision 4 Print Date/Time: 2010/07/14 11:50:11

Downloaded from Elcodis.com electronic components distributor

Typical Characteristics

V_{CC} = 5.0V, T_A = +25°C unless otherwise noted

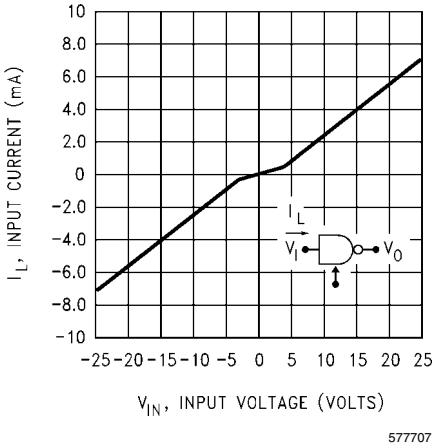

FIGURE 2. Input Current

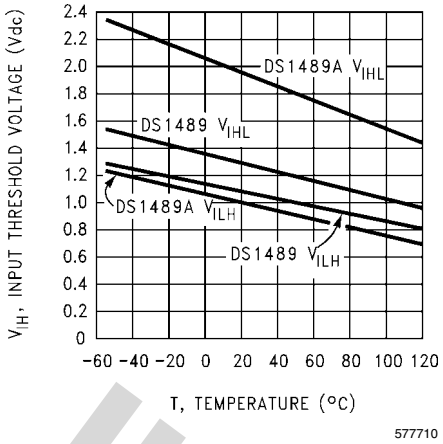

FIGURE 5. Input Threshold Voltage vs Temperature

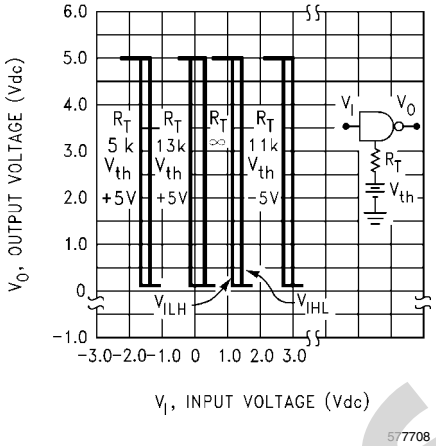

FIGURE 3. DS1489 Input Threshold Voltage Adjustment

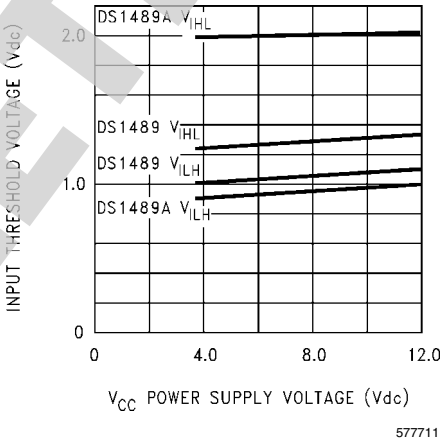

FIGURE 6. Input Threshold vs Power Supply Voltage

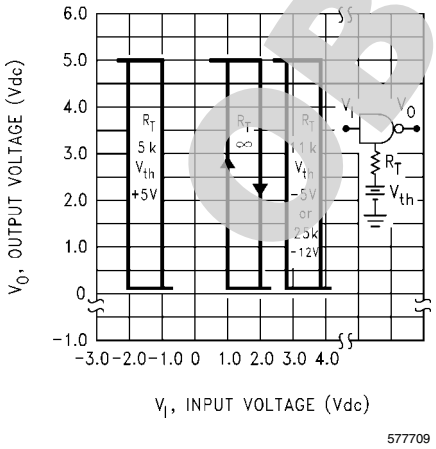

FIGURE 4. DS1489A Input Threshold Voltage Adjustment

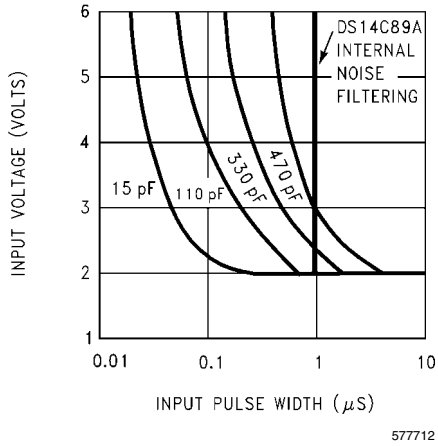

FIGURE 7. Noise Rejection vs Capacitance for DS1489A

OBSOLETE

5777 Version 6 Revision 4 Print Date/Time: 2010/07/14 11:50:11

Downloaded from Elcodis.com electronic components distributor

Typical Application Information

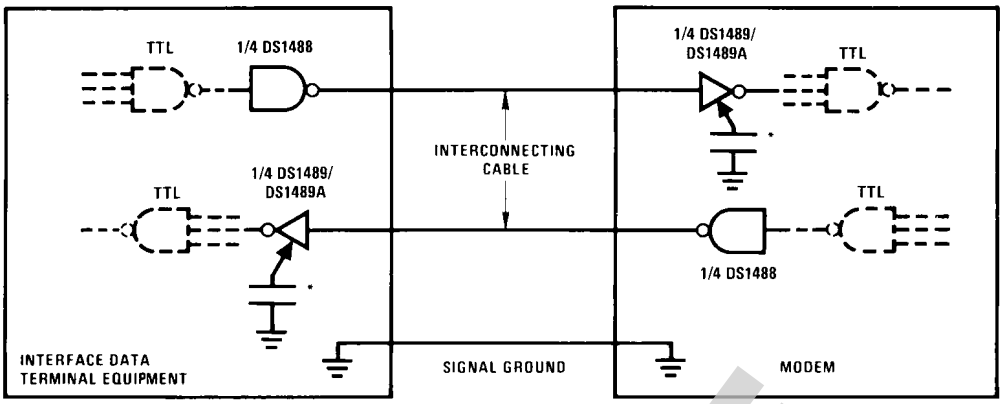

577705

*Optional for noise filtering.

Applications Using the Response Control Pin

Noise Filter
See *Figure 7*

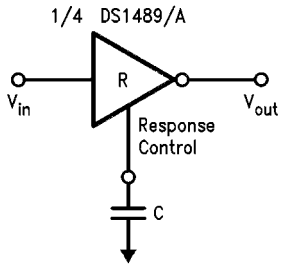

577713

Threshold Shift
See Figures 3, 4

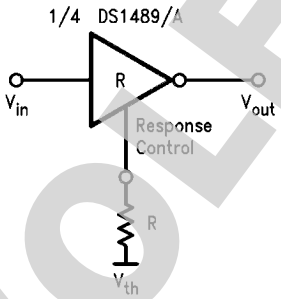

577714

Noise Filter and Threshold Shift
See Figures 3, 4, 7

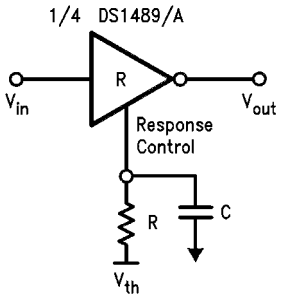

577715

Application of DS1488, DS1489A and UART

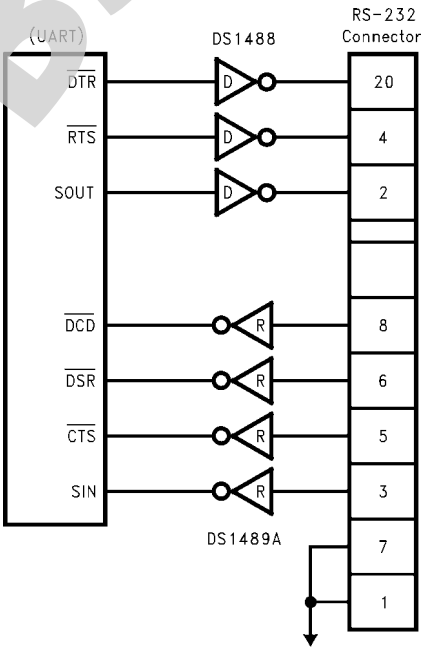

577716

OBSOLETE

5777 Version 6 Revision 4 Print Date/Time: 2010/07/14 11:50:11

Downloaded from Elcodis.com electronic components distributor

Physical Dimensions inches (millimeters) unless otherwise noted

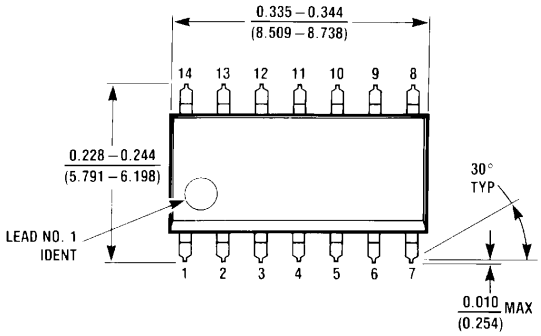

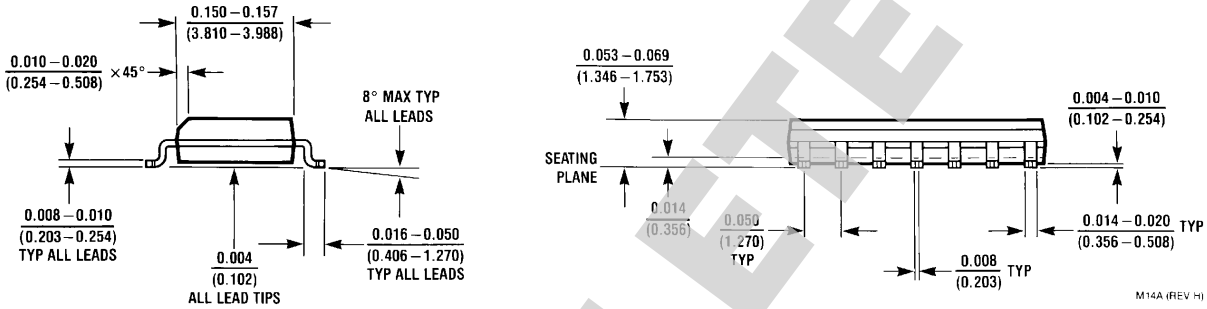

SO Package (M)
Order Number DS1489M, DS1489MX or DS1489AM, DS1489AMX
NS Package Number M14A

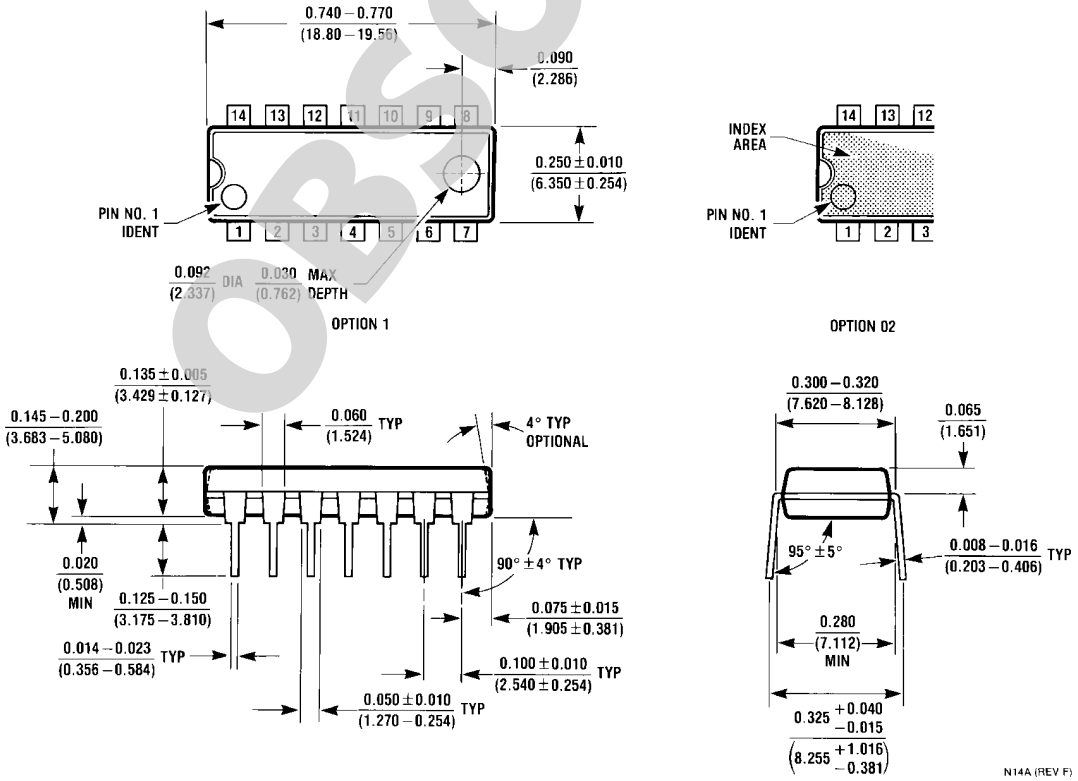

Molded Dual-In-Line Package (N)
Order Number DS1489N or DS1489AN
NS Package Number N14A

OBSOLETE

5777 Version 6 Revision 4 Print Date/Time: 2010/07/14 11:50:11

Downloaded from Elcodis.com electronic components distributor

OBSOLETE

5777 Version 6 Revision 4 Print Date/Time: 2010/07/14 11:50:11

Downloaded from Elcodis.com electronic components distributor

Notes

For more National Semiconductor product information and proven design tools, visit the following Web sites at: www.national.com

Products		Design Support	
Amplifiers	www.national.com/amplifiers	WEBENCH® Tools	www.national.com/webench
Audio	www.national.com/audio	App Notes	www.national.com/appnotes
Clock and Timing	www.national.com/timing	Reference Designs	www.national.com/refdesigns
Data Converters	www.national.com/adc	Samples	www.national.com/samples
Interface	www.national.com/interface	Eval Boards	www.national.com/evalboards
LVDS	www.national.com/lvds	Packaging	www.national.com/packaging
Power Management	www.national.com/power	Green Compliance	www.national.com/quality/green
Switching Regulators	www.national.com/switchers	Distributors	www.national.com/contacts
LDOs	www.national.com/ldo	Quality and Reliability	www.national.com/quality
LED Lighting	www.national.com/led	Feedback/Support	www.national.com/feedback
Voltage References	www.national.com/vref	Design Made Easy	www.national.com/easy
PowerWise® Solutions	www.national.com/powerwise	Applications & Markets	www.national.com/solutions
Serial Digital Interface (SDI)	www.national.com/sdi	Mil/Aero	www.national.com/milaero
Temperature Sensors	www.national.com/tempsensors	SolarMagic™	www.national.com/solarmagic
PLL/VCO	www.national.com/wireless	PowerWise® Design University	www.national.com/training

THE CONTENTS OF THIS DOCUMENT ARE PROVIDED IN CONNECTION WITH NATIONAL SEMICONDUCTOR CORPORATION ("NATIONAL") PRODUCTS. NATIONAL MAKES NO REPRESENTATIONS OR WARRANTIES WITH RESPECT TO THE ACCURACY OR COMPLETENESS OF THE CONTENTS OF THIS PUBLICATION AND RESERVES THE RIGHT TO MAKE CHANGES TO SPECIFICATIONS AND PRODUCT DESCRIPTIONS AT ANY TIME WITHOUT NOTICE. NO LICENSE, WHETHER EXPRESS, IMPLIED, ARISING BY ESTOPPEL OR OTHERWISE, TO ANY INTELLECTUAL PROPERTY RIGHTS IS GRANTED BY THIS DOCUMENT.

TESTING AND OTHER QUALITY CONTROLS ARE USED TO THE EXTENT NATIONAL DEEMS NECESSARY TO SUPPORT NATIONAL'S PRODUCT WARRANTY. EXCEPT WHERE MANDATED BY GOVERNMENT REQUIREMENTS, TESTING OF ALL PARAMETERS OF EACH PRODUCT IS NOT NECESSARILY PERFORMED. NATIONAL ASSUMES NO LIABILITY FOR APPLICATIONS ASSISTANCE OR BUYER PRODUCT DESIGN. BUYERS ARE RESPONSIBLE FOR THEIR PRODUCTS AND APPLICATIONS USING NATIONAL COMPONENTS. PRIOR TO USING OR DISTRIBUTING ANY PRODUCTS THAT INCLUDE NATIONAL COMPONENTS, BUYERS SHOULD PROVIDE ADEQUATE DESIGN, TESTING AND OPERATING SAFEGUARDS.

EXCEPT AS PROVIDED IN NATIONAL'S TERMS AND CONDITIONS OF SALE FOR SUCH PRODUCTS, NATIONAL ASSUMES NO LIABILITY WHATSOEVER, AND NATIONAL DISCLAIMS ANY EXPRESS OR IMPLIED WARRANTY RELATING TO THE SALE AND/OR USE OF NATIONAL PRODUCTS INCLUDING LIABILITY OR WARRANTIES RELATING TO FITNESS FOR A PARTICULAR PURPOSE, MERCHANTABILITY, OR INFRINGEMENT OF ANY PATENT, COPYRIGHT OR OTHER INTELLECTUAL PROPERTY RIGHT.

LIFE SUPPORT POLICY

NATIONAL'S PRODUCTS ARE NOT AUTHORIZED FOR USE AS CRITICAL COMPONENTS IN LIFE SUPPORT DEVICES OR SYSTEMS WITHOUT THE EXPRESS PRIOR WRITTEN APPROVAL OF THE CHIEF EXECUTIVE OFFICER AND GENERAL COUNSEL OF NATIONAL SEMICONDUCTOR CORPORATION. As used herein:

Life support devices or systems are devices which (a) are intended for surgical implant into the body, or (b) support or sustain life and whose failure to perform when properly used in accordance with instructions for use provided in the labeling can be reasonably expected to result in a significant injury to the user. A critical component is any component in a life support device or system whose failure to perform can be reasonably expected to cause the failure of the life support device or system or to affect its safety or effectiveness.

National Semiconductor and the National Semiconductor logo are registered trademarks of National Semiconductor Corporation. All other brand or product names may be trademarks or registered trademarks of their respective holders.

Copyright© 2010 National Semiconductor Corporation

For the most current product information visit us at www.national.com

www.national.com

National Semiconductor Americas Technical Support Center
Email: support@nsc.com
Tel: 1-800-272-9959

National Semiconductor Europe Technical Support Center
Email: europe.support@nsc.com

National Semiconductor Asia Pacific Technical Support Center
Email: ap.support@nsc.com

National Semiconductor Japan Technical Support Center
Email: jpn.feedback@nsc.com

5777 Version 6 Revision 4 Print Date/Time: 2010/07/14 11:50:11

Downloaded from Elcodis.com electronic components distributor