2-channel PRE / REC amplifier with auto-tracking interface

BA7180AS / BA7180AFS

The BA7180AS and BA7180AFS are PRE / REC amplifiers developed for use in video cassette recorders. They have been designed for use in two-head decks and feature built-in FB damping, two preamplifiers, a chroma output amplifier, an FM output amplifier (with AGC), an envelope detector, a constant-current BTL-drive REC amplifier (with AGC) and built-in channel and REC / PB switches on a single monolithic IC.

●Applications

VCRs

●Features

1) The playback amplifier has a total gain of 57dB (Typ.), and has a low-noise preamplifier. Designed for VHS-band operation with low external parts count.The ICs have 2 circuits for 2-head VCR applications.
2) Two playback output systems (through output and AGC output). The AGC output level is 300mV$_{P-P}$ (Typ.); suitable for FM brightness signal output.
3) Auto-tracking interface for automated tracking adjustment. The detector characteristic is non-linear to improve tracking accuracy during playback of low signal levels.
4) The recording amplifier uses constant-current BLT drive that handles load variations (i.e. head impedance) well, and gives stable recording characteristics. A single circuit is provided for 2-head VCR use.
5) Built-in recording level AGC means adjustment of FM recording current is not necessary.
6) Head switches for 2-channel PRE / REC system provided.
7) Operates off a sigle 5V power supply, with low power dissipation.

●Absolute maximum ratings (Ta = 25°C)

Parameter		Symbol	Limits	Unit
Power supply voltage		V_{CC}	7.0	V
Power dissipation	BA7180AS	Pd	1000*1	mW
	BA7180AFS		937.5*2	
Operating temperature		Topr	– 20 ~ + 65	°C
Storage temperature		Tstg	– 55 ~ + 150	°C

*1 Reduced by 10.0mW for each increase in Ta of 1°C over 25°C (free air).
*2 When mounted on a 90mm × 90mm, t = 1.6mm glass epoxy board, reduced by 7.5mW for each increase in Ta of 1°C over 25°C.

●Recommended operating conditions (Ta = 25°C)

Parameter	Symbol	Min.	Typ.	Max.	Unit
Playback / recording	V_{CC}	4.5	5.0	5.5	V

●Block diagram

BA7180AS

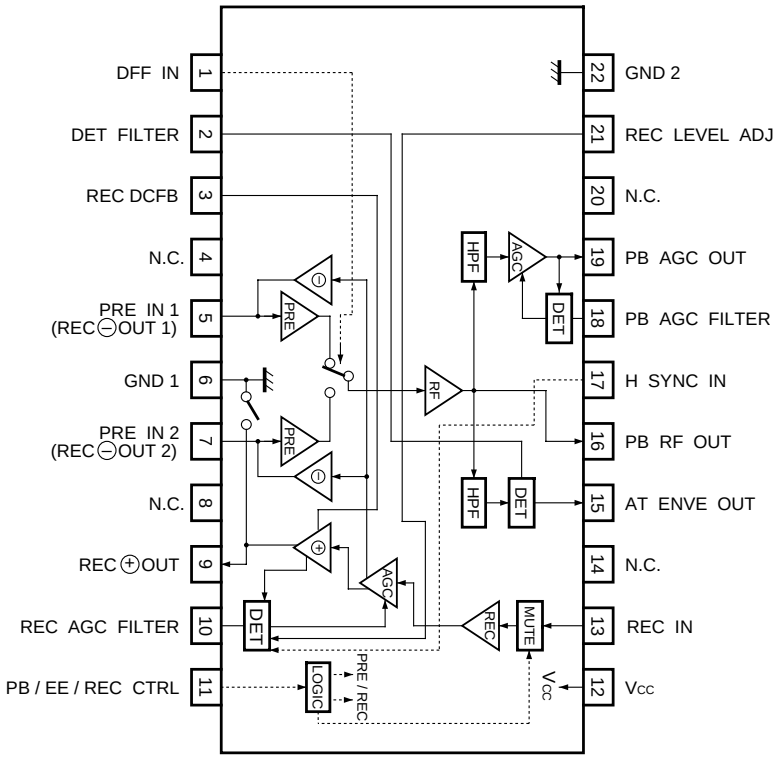

BA7180AFS

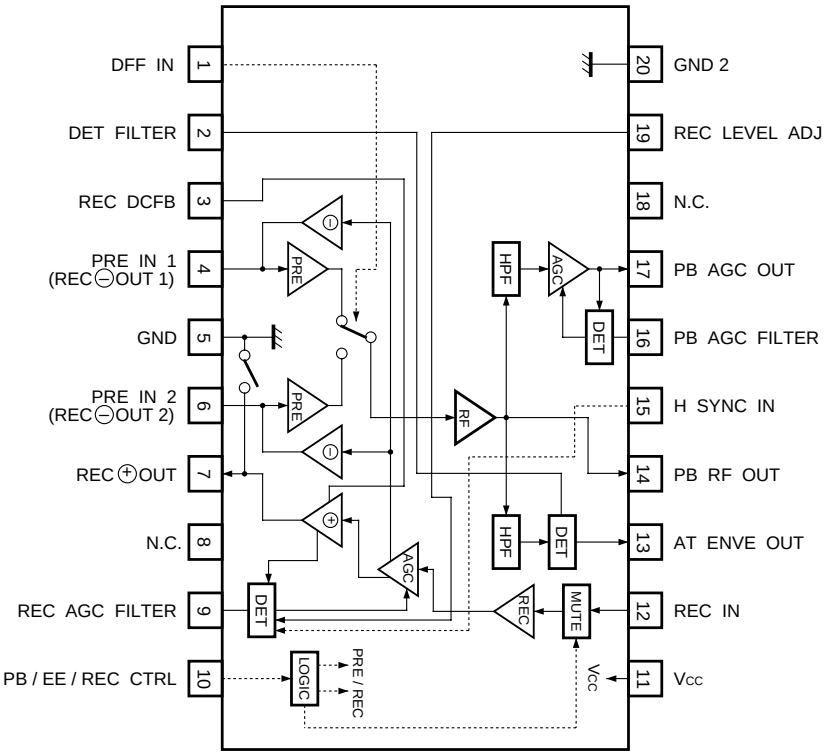

●Electrical characteristics (unless otherwise noted, Ta = 25°C, V_{CC} = 5.0V and f = 4.0MHz)

Parameter	Symbol	Min.	Typ.	Max.	Unit	Conditions (BA7180AS)	Measurement circuit
〈Playback system〉 (Pin 11 in Fig.1 measurement circuit "H")							
Quiescent current	$I_{q\ (P)}$	—	18	45	mA	No signal	Fig.1
Voltage gain CH-1	G_{VP1}	54	57	60	dB	Pin 5 input = 0.3mV_{P-P}, pin 1: L, pin 16 output measurement	Fig.1
Voltage gain CH-2	G_{VP2}	54	57	60	dB	Pin 7 input = 0.3mV_{P-P}, pin 1: L, pin 16 output measurement	Fig.1
Voltage gain differential	ΔG_{VP}	– 1	0	+ 1	dB	$\Delta G_{VP} = G_{VP1} - G_{VP2}$	Fig.1
Frequency characteristic	ΔG_{Vf}	– 7	– 3	0	dB	Difference in pin 16 output level for f = 8.0 / 1.0MHz, V_{IN} = 0.3mV_{P-P}	Fig.1
2nd harmonic distortion	$2HD_P$	—	– 45	– 38	dBc	V_{IN} = 0.3mV_{P-P}, 8.0MHz spurious	Fig.1
3rd harmonic distortion	$3HD_P$	—	– 45	– 40	dBc	V_{IN} = 0.3mV_{P-P},12.0MHz spurious, guaranteed design value.	Fig.1
Maximum output level	V_{OMP}	1.0	1.5	—	V_{P-P}	When pin 16 output 2nd harmonic distortion is -30dBc	Fig.1
Crosstalk	CT_P	—	– 38	– 32	dBc	Difference in pin 16 output level for pin 1: H / L.	Fig.1
Output DC offset	ΔV_{ODC}	– 150	0	+ 150	mV_{P-P}	Pin 16 output DC offset for pin 1: H / L.	Fig.1
Input conversion noise	V_{NIN}	—	0.25	1.0	µVrms	RG = 10Ω, input conversion of pin 14 output noise, guaranteed design value.	Fig.1
AGC output level	V_{AGC}	250	300	350	mV_{P-P}	V_{IN} = 0.3mV_{P-P}, Pin 19 output measurement	Fig.1
AGC control sensitivity	ΔV_{AGC}	—	0.3	2.0	dB	Pin 19 output level difference for V_{IN} = 0.15 ~ 0.6mV_{P-P}	Fig.1
AGC amp frequency characteristic	ΔG_{VAF}	– 3	0.5	+ 3	dB	Difference in pin 19 output level for f = 8.0 / 1.0MHz V_{IN} = 0.3mV_{P-P}, guaranteed design value.	Fig.1
PB switch ON resistance	R_{ON9}	—	4	10	Ω	Pin 9 impedance, guaranteed design value.	Fig.1
PRE CH 2 threshold voltage	V_{TH1H}	3.5	—	V_{CC}	V	Pin 1 DC voltage for CH 2 operation	Fig.1
PRE CH 1 threshold voltage	V_{TH1L}	0	—	1.2	V	Pin 1 DC voltage for CH 1 operation	Fig.1
ENVE output level	V_{ENV2}	1.9	2.4	2.9	V	Pin 15 output measurement when pin 16 output = 100mV_{P-P}	Fig.1
ENVE output level	V_{ENV3}	3.45	3.7	3.95	V	Pin 15 output measurement when pin 16 output = 400mV_{P-P}	Fig.1
ENVE saturation voltage	V_{ENV4}	4.0	4.5	—	V	Pin 15 output measurement for large signal	Fig.1
PB mode holding voltage	V_{TH10H}	3.8	—	V_{CC}	V	Pin 11 DC voltage for PB mode	Fig.1
EE mode holding voltage	V_{TH10M}	2.2	—	2.8	V	Pin 11 DC voltage for REC MUTE mode	Fig.1
REC mode threshold voltage	V_{TH10L}	0	—	1.2	V	Pin 11 DC voltage for REC mode	Fig.1

Parameter	Symbol	Min.	Typ.	Max.	Unit	Conditions (BA7180AS)	Measurement circuit
〈Recording system〉 (Pin 11 in Fig. 2 mesurement circuit "L")							
Quiescent current	$I_{q\ (R)}$	—	72	110	mA	No signal	Fig.2
Recording AGC level	I_{OAR}	27	30	33	mA_{P-P}	Pin 13 input = $125mV_{P-P}$, pin 9 output measurement	Fig.2
AGC control sensitivity	ΔI_{OAR}	—	0.3	1.5	dB	Pin 9 output level difference for pin 13 input = $62.5mV_{P-P}$ ~ $250mV_{P-P}$	Fig.2
REC amplifier frequency characteristic	ΔI_{OAF}	– 4	– 1.5	—	dB	Pin 9 output level difference for f = 8.0 / 1.0MHz, pin 12 input = $125mV_{P-P}$, guaranteed design value.	Fig.2
2nd harmonic distortion	$2HD_R$	—	– 45	– 38	dBc	Pin 13 input = $125mV_{P-P}$ 8MHz spurious	Fig.2
3rd harmonic distortion	$3HD_R$	—	– 50	– 40	dBc	Pin 13 input = $125mV_{P-P}$ 12MHz spurious, guaranteed design value.	Fig.2
Cross modulation distortion	CMD_R	—	– 50	– 40	dBc	4.0MHz ± 630kHz spurious, guaranteed design value.	Fig.2
Maximum output level	I_{OMR}	40	50	—	mA_{P-P}	When pin 9 output 2nd harmonic distortion is -30dB	Fig.2
Recording current load characteristic	ΔI_{ORL}	– 1.5	– 0.35	—	dB	Pin 9 output level difference for load L: 8.2 ~ 12µH, guaranteed design value.	Fig.2
Mute attenuation ratio	MU_R	—	– 45	– 38	dBc	Pin 9 output level difference for pin 11: M / H.	Fig.2
AGC mode holding voltage	V_{TH15H}	2.7	—	V_{CC}	V	Pin 17 DC voltage to maintain recording AGC operation	Fig.2
$\overline{AGC}$ mode holding voltage	V_{TH15L}	0	—	1.2	V	Pin 17 DC voltage to maintain recording AGC stopped	Fig.2

Note:
dBc: dB below carrier (used to express relative level from carrier reference for convenience sake)

●Reference values (unless otherwise noted, Ta = 25°C, V_{CC} = 4.8V and f = 4.0MHz)

Parameter	Symbol	Min.	Typ.	Max.	Unit	Conditions (BA7180AS)
ENVE output level	$V_{ENV2'}$	1.8	2.3	2.8	V	Pin 15 output measurement when pin 16 output = $100mV_{P-P}$.
ENVE output level	$V_{ENV3'}$	3.35	3.6	3.85	V	Pin 15 output measurement when pin 16 output = $400mV_{P-P}$.

●Measurement circuits

BA7180AS (playback system)

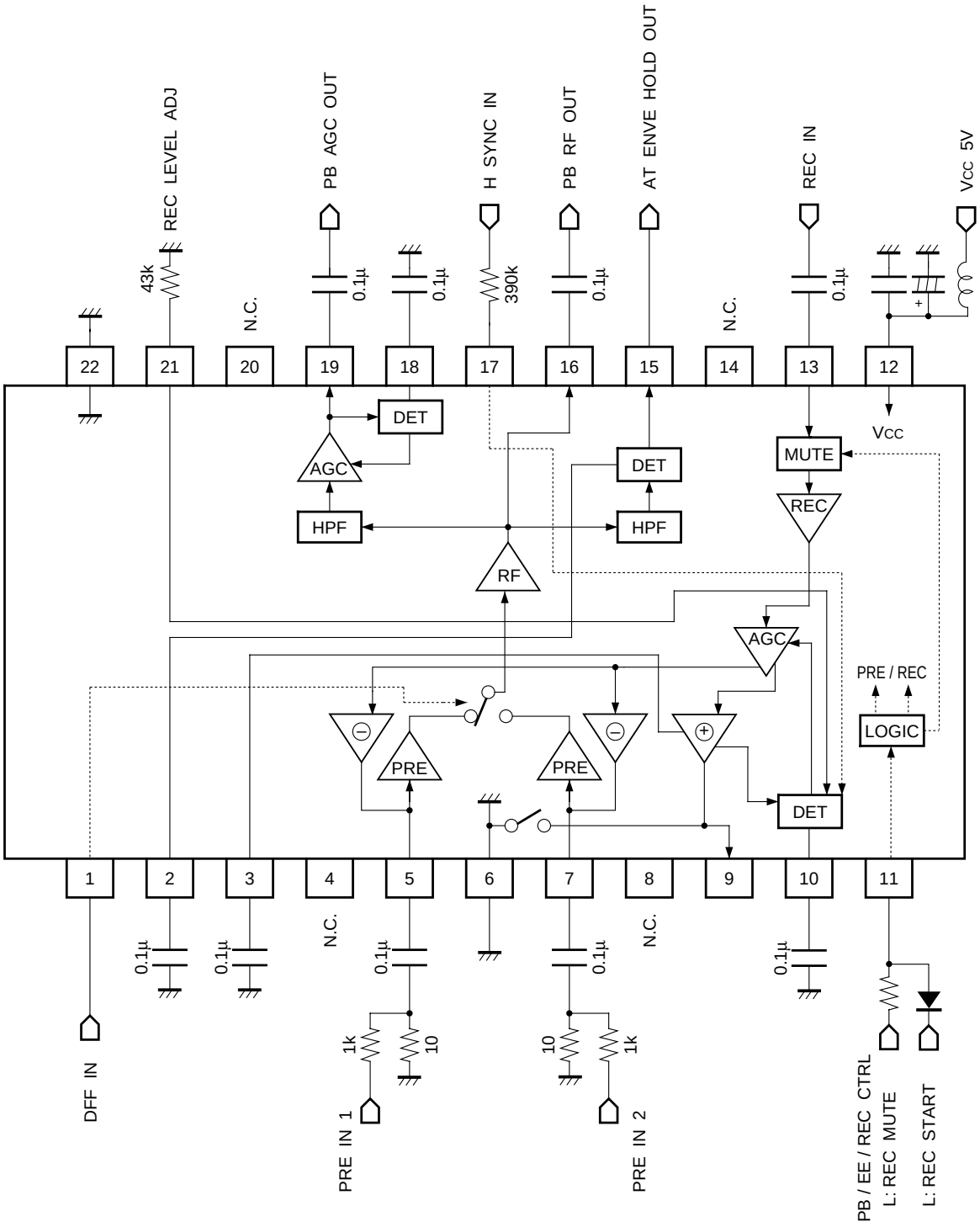

Units: R [Ω]
C [F]
L [H]

Fig.1

BA7180AS (recording system)

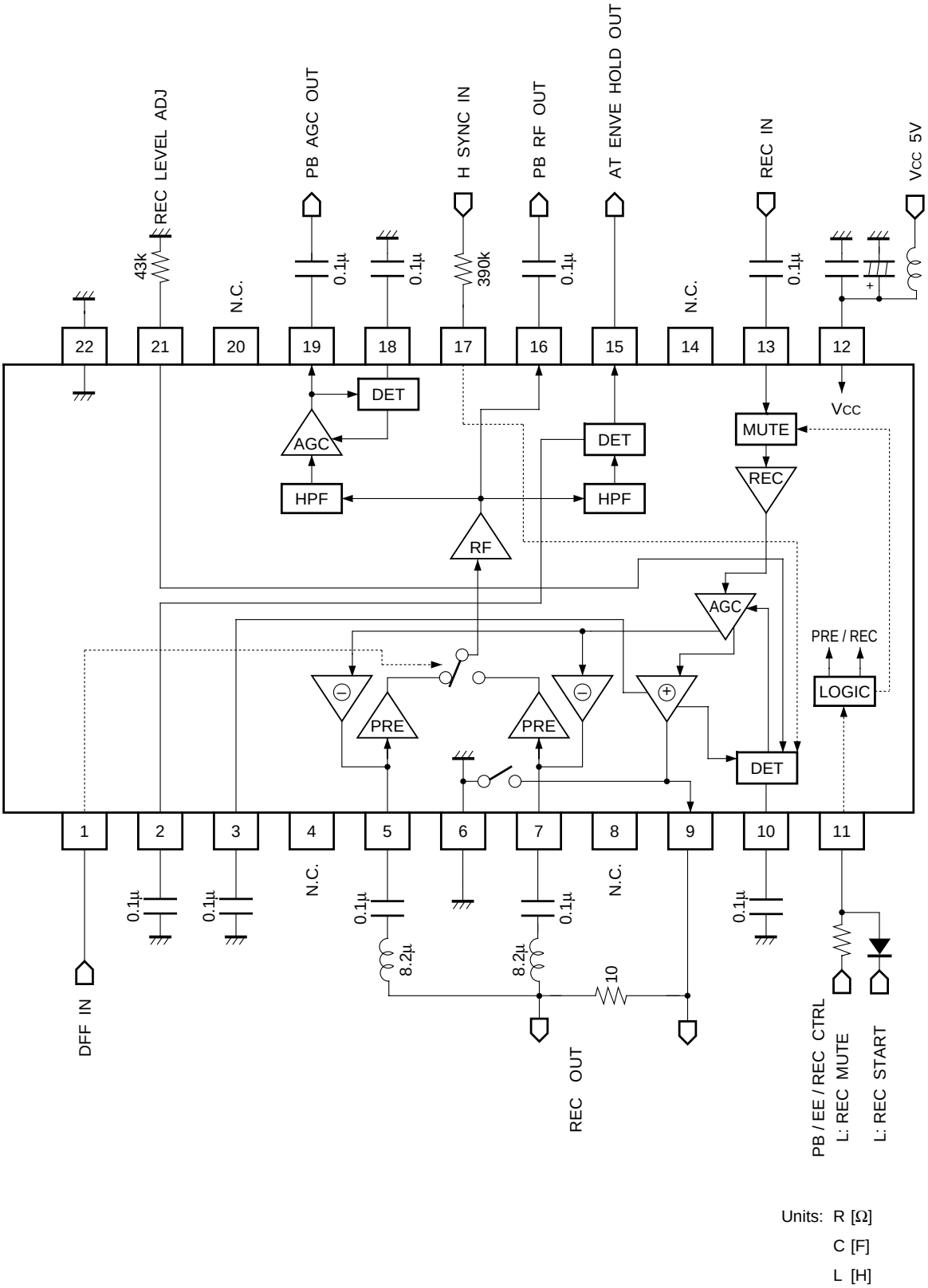

Units: R [Ω]
C [F]
L [H]

Fig.2

BA7180AFS (playback system)

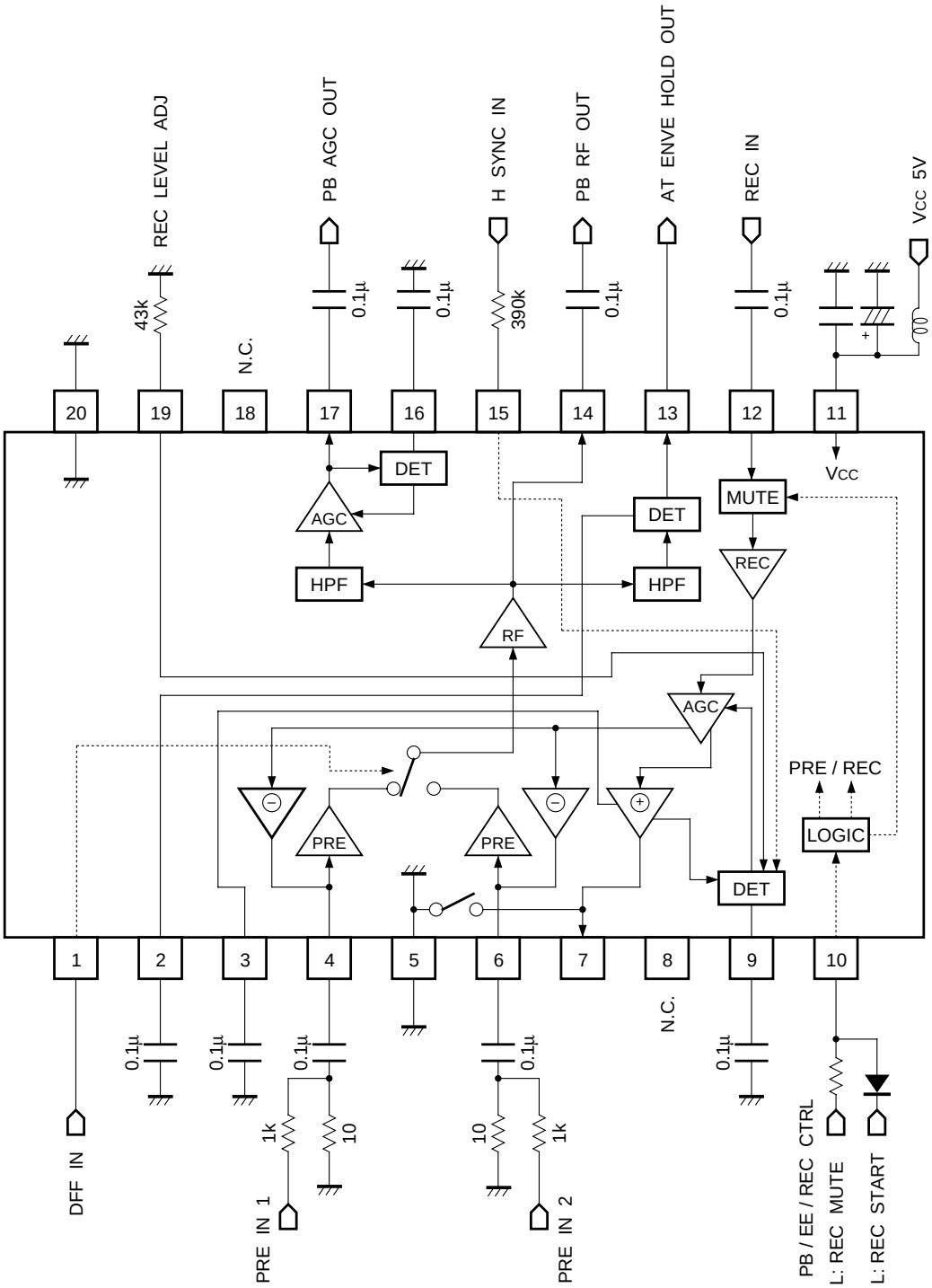

Units: R [Ω]
C [F]
L [H]

Fig.3

BA7180AFS (recording system)

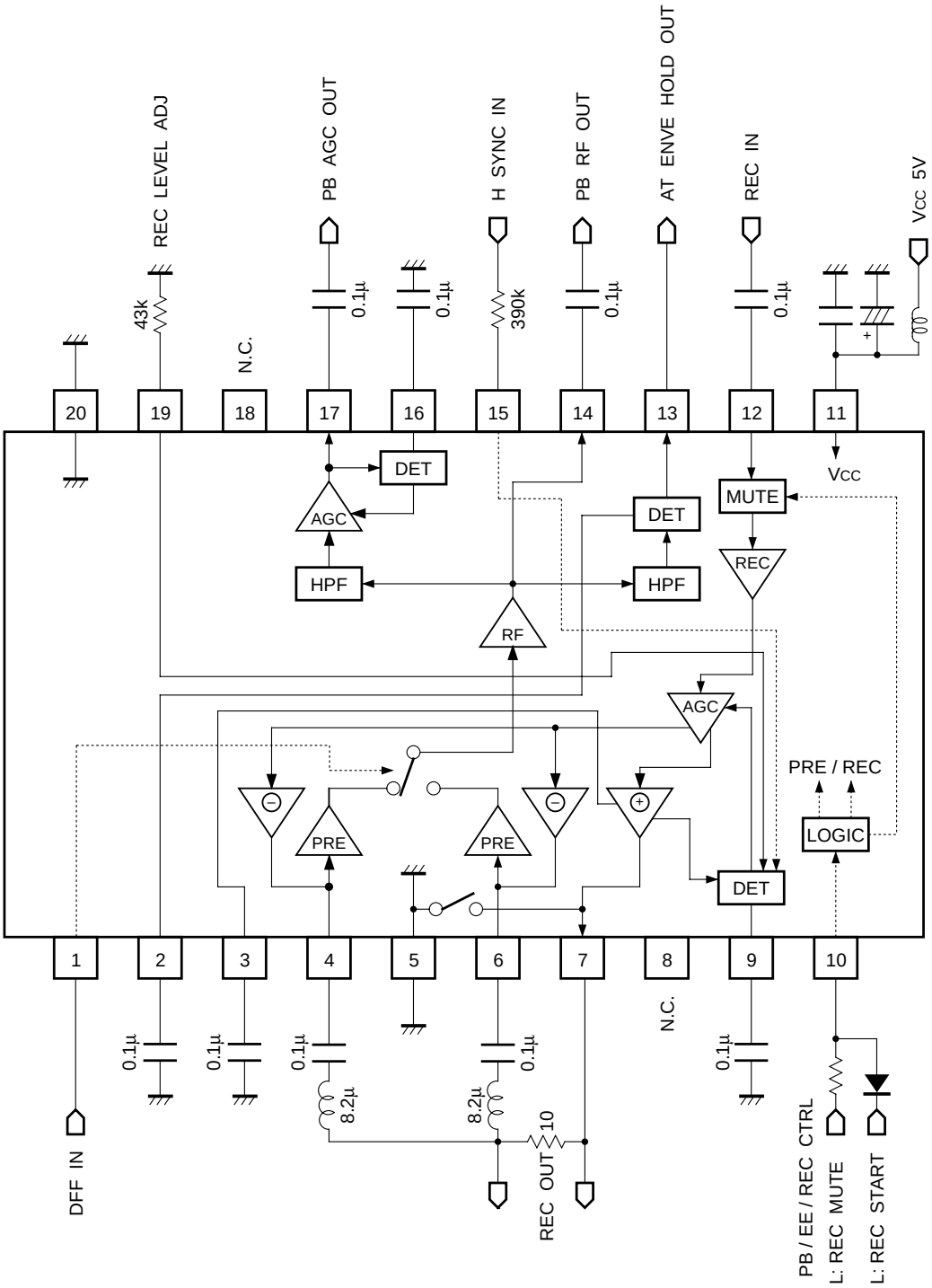

Units: R [Ω]
C [F]
L [H]

Fig.4

●Circuit operation

Control system logic table

(1) DFF IN (pin 1)

• Playback input selection (head switching)

Control pin	Function	Control voltage V_{CTRL1} [V]
DFF IN	Selected playback input	
H	Channel 2 (PRE IN2)	3.5 ~ V_{CC}
L	Channel 1 (PRE IN1)	0.0 ~ 1.2

(2) H SYNC IN (BA7180AS: pin 17, BA7180AFS: pin 15)

• Controls recording AGC detector block operation.

Control pin	Function	Control voltage V_{CTRL1} [V]
H SYNC	AGC detector	
H	ON	2.7 ~ V_{CC}
L	OFF	0.0 ~ 1.2

(3) PB / EE / REC CTRL (BA7180AS: pin 11, BA7180AFS: pin 10)

• Playback / recording mute / recording mode switching

Control pin	Mode	Function				Control voltage V_{CTRL1} [V]
PB / EE / REC		PRE AMP	AT ENVE	REC MUTE	REC AMP	
H	PB	ON	ON	OFF	OFF	3.8 ~ V_{CC}
M	REC MUTE	OFF	OFF	ON	ON	2.2 ~ 2.8
L	REC	OFF	OFF	OFF	ON	0.0 ~ 1.2

· The PB / EE / REC CTRL pin is pulled up to V_{CC} via a 33kΩ resistor.

●Operation notes

N.C. pins can be connected to GND.

●Application examples

BA7180AS

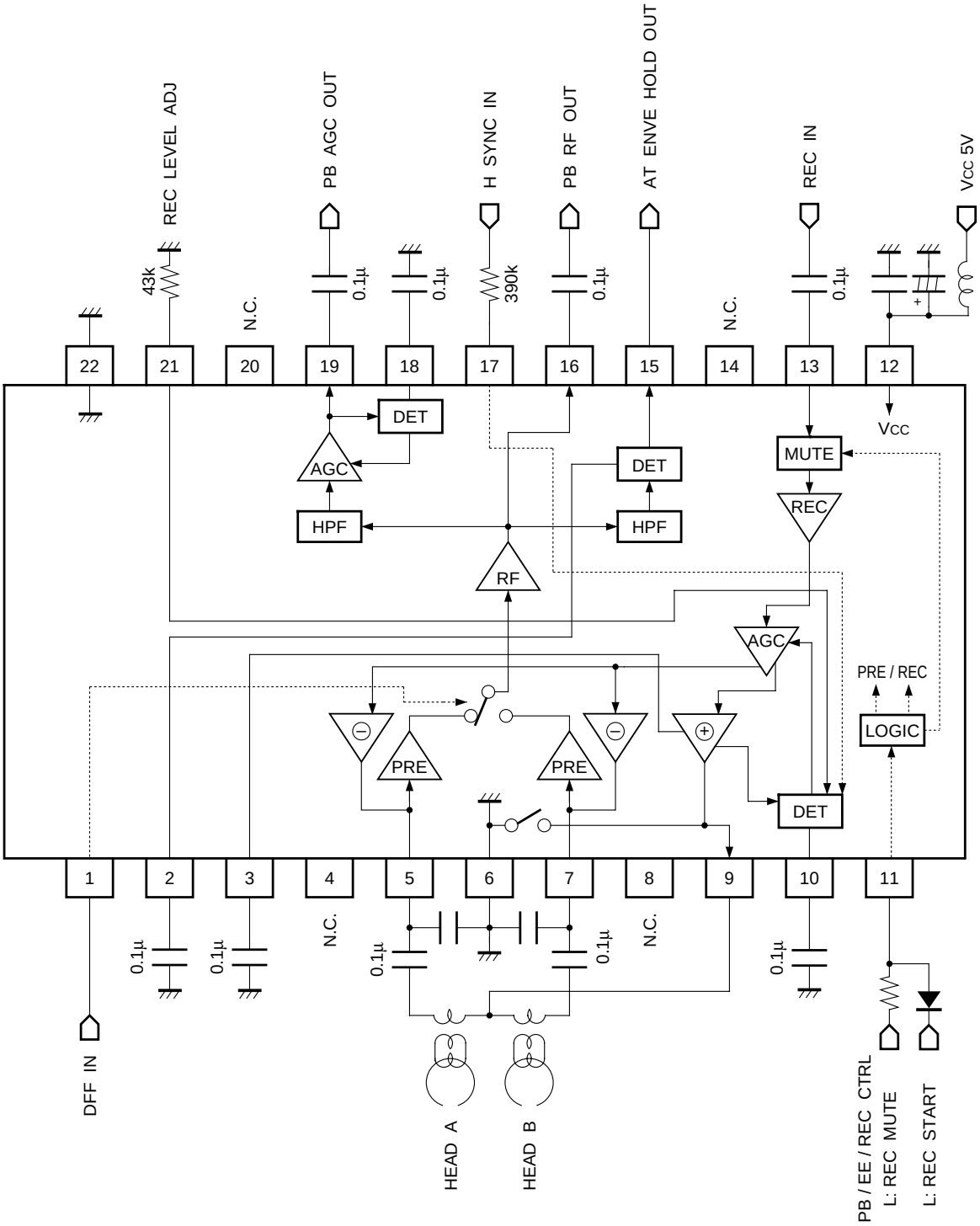

Units: R [Ω]
C [F]
L [H]

Fig.5

BA7180AFS

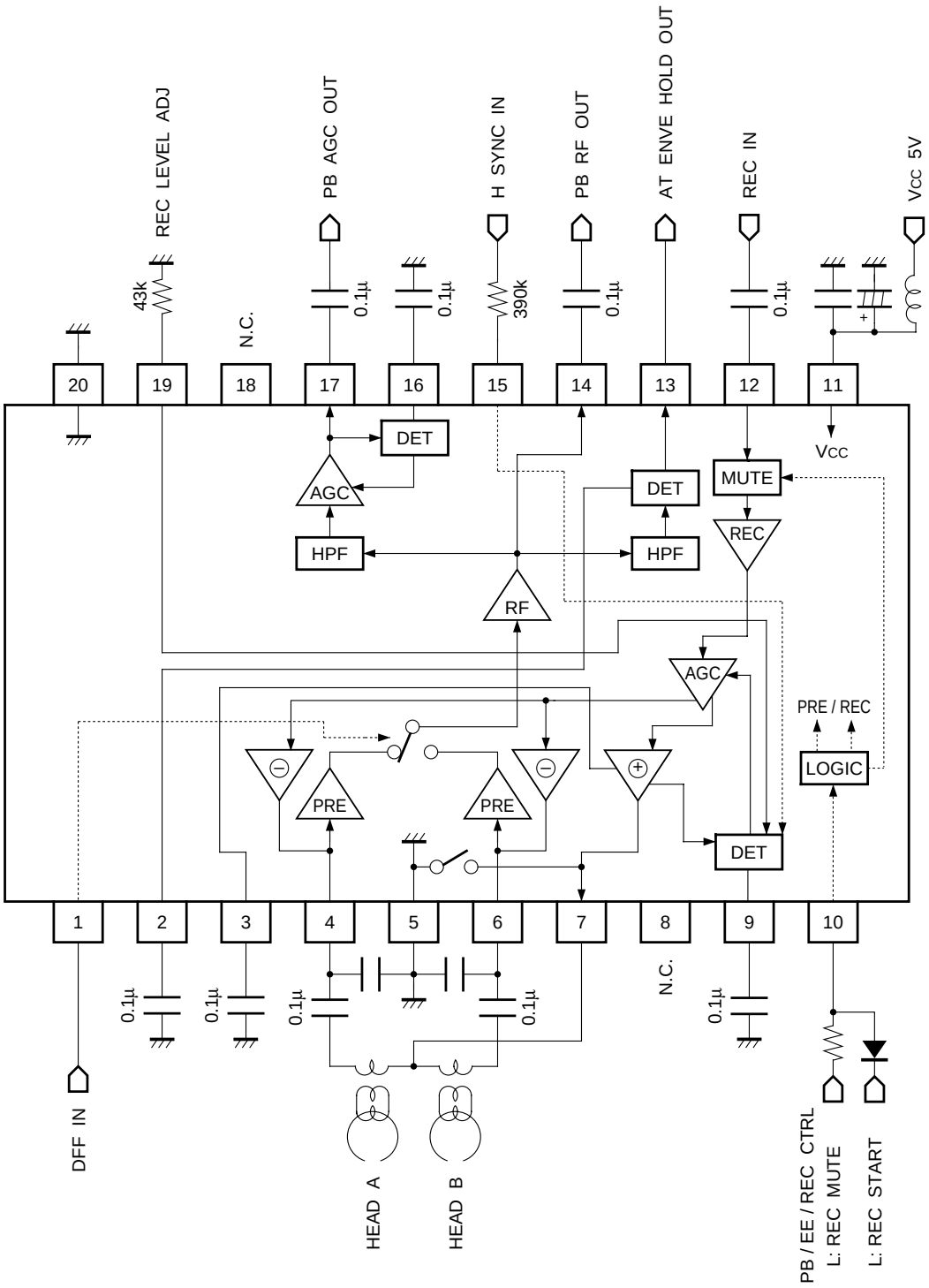

Units: R [Ω]
C [F]
L [H]

Fig.6

●External dimensions (Units: mm)

BA7180AS

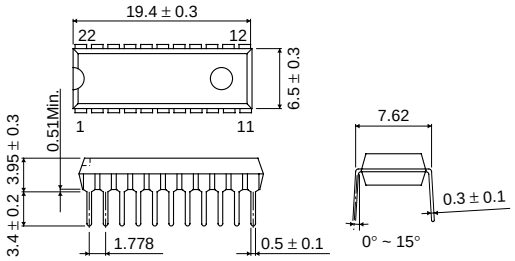

SDIP22

BA7180AFS

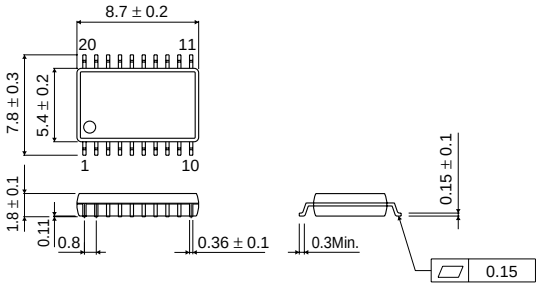

SSOP-A20