Tous droits strictement reserves. Reproduction ou communication a des tiers interdite sous quelque forme que ce soit sans autorisation ecrite du propietaire. Propriete de c FCI. Droits de reproduction FCI.

All rights strictly reserved. Reproduction or issue to third parties in any form whatever is not permitted without written authority from the proprietor. Property of FCI. Copyright FCI.

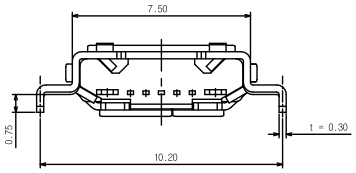

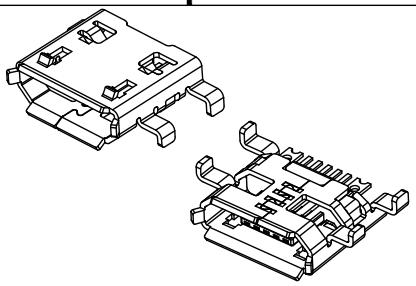

-NOTE-

1. This product is enabie to mount both USB-IF Recommended PCB pattern
2. Coplanarity : The damension belween flat tool and botton of soldering terminals when connector put on the flat tool like PCB Signal terminal / Metal tal (front) : Max 0.08 mm
3. PRODUCT NUMBERING: 10103593 - 0001LF

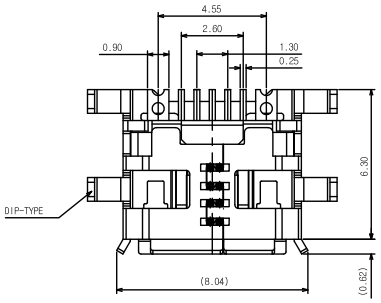

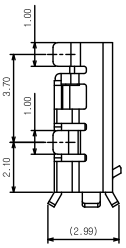

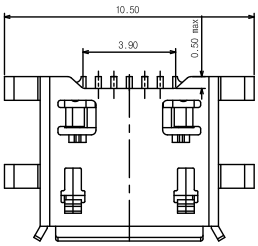

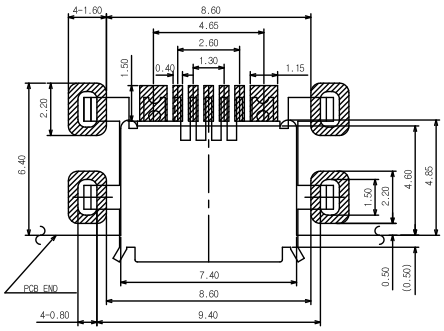

USB-IF REVERSE type Pattern
USB-IF Recommended RIVERSE type Pattern
(Tolerance : ±0.05)

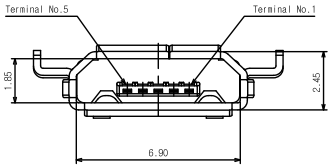

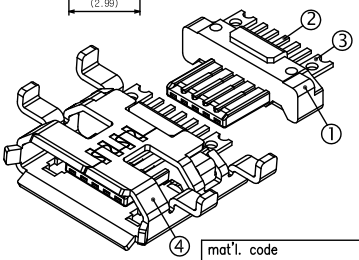

No.	Part Name	Material	Finish
1	Scoket Housing	Thermoplastic(Black)	UL94V-0
2	Scoket Contact Ter'	Copper alloy	Au over Ni
3	Scoket Ter'	Copper alloy	Au over Ni
4	Scoket Shield	Stainless Steel	Ni plated

mat'l. code			
ltr	ecn no	dr	date
A	T10-0002	J.H	1/7/10

tolerances unless otherwise specified	
linear	.X ± 0.38
	.XX ± 0.25
	.XXX ± 0.15
angles	0° ±2°

dr	JASON HSU	1/7/10
engr	JASON HSU	1/7/10
chr	GARY HSIEH	1/7/10
appd	JOSEPH HSIA	1/7/10

sheet index	revision sheet	A 1

CUSTOMER COPY

projection

MM

scale NA

FCI www.fciconnect.com

title MICRO-USB B-TYPE MID-MOUNT

product family USB

size A4 dwg no 10103593

code TWN

sheet 1 of 1

cage code

ACAD PDM: Rev:A STATUS: Released Printed: Jun 02, 2010

Downloaded from Elcodis.com electronic components distributor