Order this document by MC33215/D

MOTOROLA

MC33215

Advance Information

Telephone Line Interface and Speakerphone Circuit

The MC33215 is developed for use in fully electronic telephone sets with speakerphone functions. The circuit performs the ac and dc line termination, 2–4 wire conversion, line length AGC and DTMF transmission. The speakerphone part includes a half duplex controller with signal and noise monitoring, base microphone and loudspeaker amplifiers and an efficient supply. The circuit is designed to operate at low line currents down to 4.0 mA enabling parallel operation with a classical telephone set.

- Highly Integrated Cost Effective Solution
- Straightforward AC and DC Parameter Adjustments
- Efficient Supply for Loudspeaker Amplifier and Peripherals
- Stabilized Supply Point for Handset Microphone
- Stabilized Supply Point for Base Microphone
- Loudspeaker Amplifier can be Powered and Used Separately
- Smooth Switch–Over from Handset to Speakerphone Operation
- Adjustable Switching Depth for Handsfree Operation

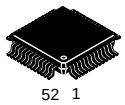

FB SUFFIX
PLASTIC PACKAGE
CASE 848B
(TQFP–52)

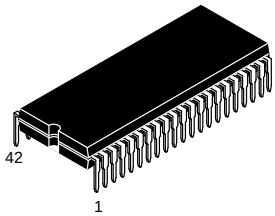

B SUFFIX
PLASTIC PACKAGE
CASE 858
(SDIP–42)

ORDERING INFORMATION

Device	Operating Temperature Range	Package
MC33215FB	T_A = –20° to +70°C	TQFP–52
MC33215B		SDIP–42

Simplified Application

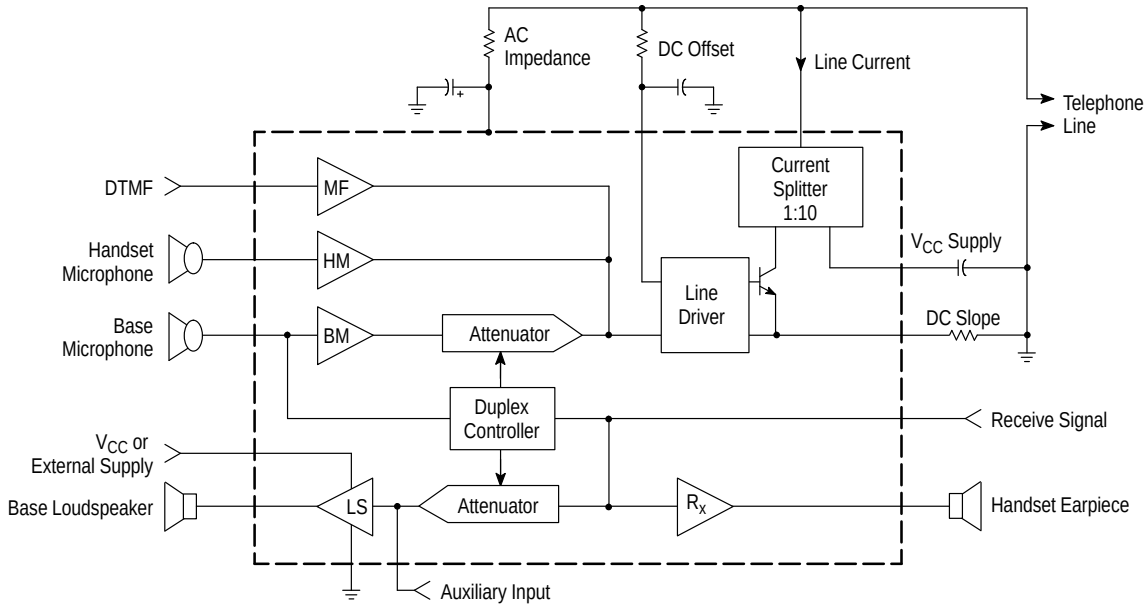

This device contains 2782 active transistors.

This document contains information on a new product. Specifications and information herein are subject to change without notice.

© Motorola, Inc. 1997

Rev 0

For More Information On This Product,
Go to: www.freescale.com

Freescale Semiconductor, Inc.

Downloaded from Elcodis.com electronic components distributor

FEATURES

Line Driver and Supply

- AC and DC Termination of Telephone Line
- Adjustable Set Impedance for Real and Complex Termination
- Efficient Supply Point for Loudspeaker Amplifier and Peripherals
- Two Stabilized Supply Points for Handset and Base Microphones
- Separate Supply Arrangement for Handset and Speakerphone Operation

Handset Operation

- Transmit and Receive Amplifiers
- Differential Microphone Inputs
- Sidetone Cancellation Network
- Line Length AGC
- Microphone and Earpiece Mute
- Separate Input for DTMF and Auxiliary Signals
- Parallel Operation Down to 4.0 mA of Line Current

Speakerphone Operation

- Handsfree Operation via Loudspeaker and Base Microphone
- Integrated Microphone and Loudspeaker Amplifiers
- Differential Microphone Inputs
- Loudspeaker Amplifier can be Powered and Used Separately from the Rest of the Circuit
- Integrated Switches for Smooth Switch–Over from Handset to Speakerphone Operation
- Signal and Background Noise Monitoring in Both Channels
- Adjustable Switching Depth for Handsfree Operation
- Adjustable Switch–Over and Idle Mode Timing
- Dial Tone Detector in the Receive Channel

Figure 1. Pin Connections

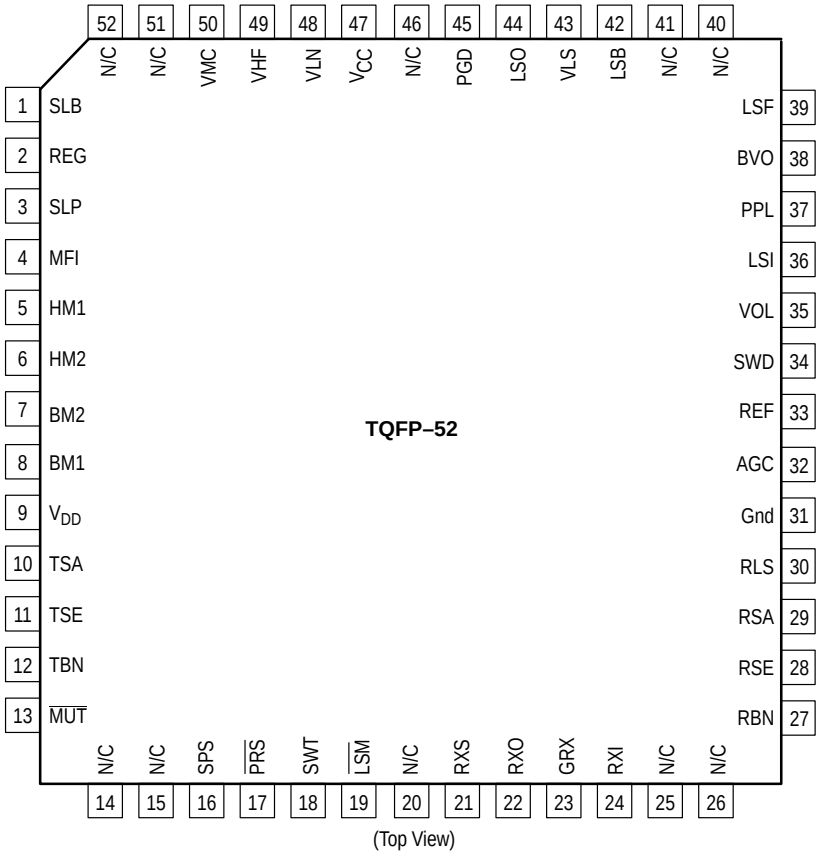

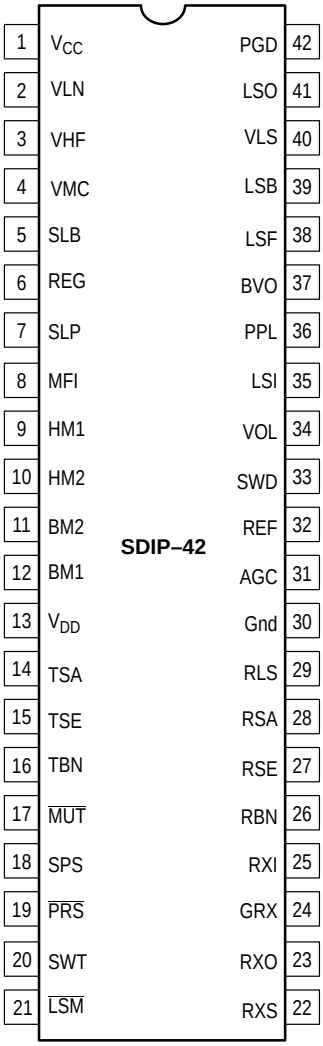

Freescale Semiconductor, Inc.
Downloaded from Elcodis.com electronic components distributor

MAXIMUM RATINGS

Rating	Min	Max	Unit
Peak Voltage at VLN	–0.5	12	V
Maximum Loop Current	–	160	mA
Voltage at VLS (if Powered Separately)	–0.5	12	V
Voltage at VHF (if Externally Applied)	–0.5	5.5	V
Voltage at SPS, $\overline{MUT}$, $\overline{PRS}$, $\overline{LSM}$	–0.5	7.5	V
Maximum Junction Temperature	–	150	°C
Storage Temperature Range	–65	150	°C

NOTE: ESD data available upon request.

RECOMMENDED OPERATING CONDITIONS

Characteristic	Min	Max	Unit
Biasing Voltage at VLN	2.4	10	V
Loop Current	4.0	130	mA
Voltage at VLS	2.4	8.0	V
Voltage at VHF (if Externally Applied)	2.4	5.0	V
Voltage at SPS, $\overline{MUT}$, $\overline{PRS}$, $\overline{LSM}$	0	5.0	V
Operating Ambient Temperature Range	–20	70	°C

ELECTRICAL CHARACTERISTICS

(All parameters are specified at T = 25°C, I_{line} = 18 mA, VLS = 2.9 V, f = 1000 Hz, $\overline{PRS}$ = high, $\overline{MUT}$ = high, SPS = low, $\overline{LSM}$ = high, test figure in Figure 17 with S1 in position 1, unless otherwise stated.)

Characteristic	Min	Typ	Max	Unit
DC LINE VOLTAGE				
Line Voltage V_{line}				V
Parallel Operation, I_{line} = 4.0 mA	–	2.4	–	
I_{line} = 20 mA	3.9	4.2	4.5	
I_{line} = 70 mA	4.8	5.2	5.6	
SUPPLY POINT V_{DD}				
Internal Current Consumption from V_{DD} V_{DD} = 2.5 V	–	1.2	1.5	mA
SUPPLY POINT VMC				
DC Voltage at VMC (= VMC0)	1.6	1.75	1.9	V
Current Available from VMC VMC = VMC0 – 200 mV	1.0	–	–	mA
SUPPLY POINT VHF				
DC Voltage at VHF (= VHF0)	2.6	2.8	3.0	V
Internal Current Consumption from VHF VHF = VHF0 + 100 mV	–	1.4	2.0	mA
Current Available from VHF VHF = VHF0 – 300 mV	2.0	–	–	mA
SUPPLY POINT V_{CC}				
Current Available from V_{CC} V_{CC} = 2.4 V, I_{line} = 20 mA	13	15	–	mA
DC Voltage Drop Between VLN and V_{CC} I_{line} = 20 mA	–	1.0	1.5	V
SUPPLY INPUT VLS				
Internal Current Consumption from VLS	–	1.0	1.5	mA

For More Information On This Product,
Go to: www.freescale.com

Freescale Semiconductor, Inc.

Downloaded from Elcodis.com electronic components distributor

ELECTRICAL CHARACTERISTICS (continued) (All parameters are specified at T = 25°C, I_{line} = 18 mA, VLS = 2.9 V, f = 1000 Hz, $\overline{PRS}$ = high, $\overline{MUT}$ = high, SPS = low, $\overline{LSM}$ = high, test figure in Figure 17 with S1 in position 1, unless otherwise stated.)

Characteristic	Min	Typ	Max	Unit
LOGIC INPUTS				
Logic Low Level Pins $\overline{PRS}$, $\overline{MUT}$, SPS, $\overline{LSM}$	–	–	0.4	V
Logic High Level Pins $\overline{PRS}$, $\overline{MUT}$, SPS, $\overline{LSM}$	2.0	–	5.0	V
Internal Pull Up Pins $\overline{PRS}$, $\overline{MUT}$, $\overline{LSM}$	–	100	–	kΩ
Internal Pull Down Pin SPS	–	100	–	kΩ
T_x CHANNEL, HANDSET MICROPHONE AMPLIFIER				
Voltage Gain from V_{HM} to V_{line} V_{HM} = 1.5 mVrms	46	47	48	dB
Gain Reduction in Mute Condition $\overline{MUT}$ = Low or $\overline{PRS}$ = Low or SPS = High	60	–	–	dB
Input Impedance at HM1 and HM2	14	18	22	kΩ
Common Mode Rejection Ratio	–	50	–	dB
Total Harmonic Distortion at VLN V_{HM} = 4.5 mVrms	–	–	2.0	%
Psophometrically Weighted Noise Level at V_{line} HM1 and HM2 Shorted with 200 Ω	–	–72	–	dBmp
T_x CHANNEL, BASE MICROPHONE AMPLIFIER (SPS = HIGH, T_x MODE FORCED)				
Voltage Gain from V_{BM} to V_{line} V_{BM} = 0.5 mVrms	53	55.5	58	dB
Input Impedance at BM1 and BM2	14	18	22	kΩ
Common Mode Rejection Ratio	–	50	–	dB
Total Harmonic Distortion at VLN V_{BM} = 1.5 mV	–	–	2.0	%
Psophometrically Weighted Noise Level at V_{line} BM1 and BM2 Shorted with 200 Ω	–	–62	–	dBmp
Gain Reduction in Mute Condition $\overline{MUT}$ = Low or $\overline{PRS}$ = Low or SPS = Low	60	–	–	dB
T_x CHANNEL, DTMF AMPLIFIER ($\overline{MUT}$ = LOW OR $\overline{PRS}$ = LOW)				
Voltage Gain from V_{MF} to V_{line} V_{MF} = 7.5 mVrms	34	35	36	dB
Input Impedance at MFI	14	18	22	kΩ
Gain Reduction in Mute Condition $\overline{MUT}$ = High or $\overline{PRS}$ = Low	60	–	–	dB
R_x CHANNEL, EARPIECE AMPLIFIER				
Voltage Gain from V_{RXI} to V_{EAR} (Note 1) V_{line} = 20 mVrms	23	24	25	dB
Gain Reduction in Mute Condition $\overline{MUT}$ = Low or SPS = Low	60	–	–	dB
Input Impedance at RXI	24	30	36	kΩ
Psophometrically Weighted Noise Level at V_{EAR} RXI Shorted to Gnd via 10 µF	–	130	–	µVrms
Confidence Level During DTMF Dialing V_{MF} = 7.5 mVrms, $\overline{MUT}$ = Low	10	15	20	mVrms
Output Swing Capability into 150 Ω THD ≤2%	680	–	–	mVpp
Output Swing Capability into 450 Ω THD ≤2%, R_{RXO} = 360 kΩ	1800	–	–	mVpp

NOTE: 1. Corresponding to –0.6 dB gain from the line to output RXO in the typical application.

For More Information On This Product,
Go to: www.freescale.com

Freescale Semiconductor, Inc.

Downloaded from Elcodis.com electronic components distributor

ELECTRICAL CHARACTERISTICS (continued) (All parameters are specified at T = 25°C, I_{line} = 18 mA, VLS = 2.9 V, f = 1000 Hz, $\overline{PRS}$ = high, $\overline{MUT}$ = high, SPS = low, $\overline{LSM}$ = high, test figure in Figure 17 with S1 in position 1, unless otherwise stated.)

Characteristic	Min	Typ	Max	Unit
R_x CHANNEL, LOUDSPEAKER PRE–AMPLIFIER (SPS = HIGH, R_x MODE FORCED)				
Voltage Gain from V_{RXI} to V_{RLS} (Note 2) V_{line} = 20 mVrms	21	24	27	dB
Gain Reduction in Mute Condition SPS = Low or $\overline{MUT}$ = Low	60	–	–	dB
R_x CHANNEL, LOUDSPEAKER AMPLIFIER				
Voltage Gain from V_{LSI} to V_{LSP} V_{LSI} = 10 mVrms	25	26	27	dB
Attenuation at Delta R_{VOL} = 47 kΩ	–	32	–	dB
Psophometrically Weighted Noise Level at V_{LSP} RXI Shorted to Gnd via 10 µF	–	1.2	–	mVrms
Confidence Level During DTMF Dialing V_{MF} = 7.5 mVrms $\overline{MUT}$ = Low	150	200	250	mVrms
Available Peak Current from LSO	110	–	–	mApeak
Output Capability into 25 Ω THD ≤2%, V_{LSI} = 55 mVrms	1.8	–	–	Vpp
Output Capability into 25 Ω THD ≤2%, V_{LS} = 5.0 V, V_{LSI} = 90 mVrms	2.7	–	–	Vpp
Gain Reduction in Mute Condition $\overline{LSM}$ = Low	60	–	–	dB
R_x CHANNEL PEAK–TO–PEAK LIMITER				
Peak–to–Peak Limiter Attack Time V_{LSI} Jumps from 40 mVrms to 120 mVrms	–	–	5.0	ms
Peak–to–Peak Limiter Release Time V_{LSI} Jumps from 120 mVrms to 40 mVrms	–	300	–	ms
THD at 10 dB Overdrive V_{LSI} = 120 mVrms	–	–	7.0	%
Peak–to–Peak Limiter Disable Threshold at PPL	–	–	0.1	V
AUTOMATIC GAIN CONTROL				
Gain Reduction in Transmit and Receive Channel with Respect to I_{line} = 18 mA I_{line} = 70 mA	4.5	6.0	7.5	dB
Gain Variation in Transmit and Receive Channel with Respect to I_{line} =18 mA with AGC Disabled (AGC to V_{DD})	–	–	1.5	dB
Highest Line Current for Maximum Gain	–	20	–	mA
Lowest Line Current for Minimum Gain	–	50	–	mA
BALANCE RETURN LOSS				
Balance Return Loss with Respect to 600 Ω	20	–	–	dB
SIDETONE				
Voltage Gain from V_{HM} to V_{EAR} S1 in Position 2	–	–	28	dB
LOGARITHMIC AMPLIFIERS AND ENVELOPE DETECTORS				
Voltage Gain from RXI to RSA V_{RXI} = 15 mVrms	18	20	22	dB
Voltage Gain from BMI to TSA V_{BM} = 0.5 mVrms	17.5	18.5	19.5	dB
Dynamic Range of Logarithmic Compression from TSA to TSE and RSA to RSE I_{TSA} and I_{RSA} from 2.5 µA to 250 µA	40	–	–	dB
Envelope Tracking Between TSE and RSE and Between TBN and RBN	–	±3.0	–	dB
Maximum Source Current from TSE or RSE	0.3	0.4	0.5	µA

NOTE: 2. Corresponding to –0.6 dB gain from the line to output RLS in the typical application.

For More Information On This Product,
Go to: www.freescale.com

Freescale Semiconductor, Inc.

Downloaded from Elcodis.com electronic components distributor

ELECTRICAL CHARACTERISTICS (continued) (All parameters are specified at T = 25°C, I_{line} = 18 mA, VLS = 2.9 V, f = 1000 Hz, $\overline{PRS}$ = high, $\overline{MUT}$ = high, SPS = low, $\overline{LSM}$ = high, test figure in Figure 17 with S1 in position 1, unless otherwise stated.)

Characteristic	Min	Typ	Max	Unit
LOGARITHMIC AMPLIFIERS AND ENVELOPE DETECTORS				
Maximum Sink Current into TSE or RSE	100	–	–	µA
Maximum Sink Current into TBN and RBN	0.7	1.0	1.3	µA
Maximum Source Current from TBN or RBN	100	–	–	µA
Dial Tone Detector Threshold at V_{line}	–	20	–	mVrms
Speech Noise Threshold Both Channels	–	4.5	–	dB
ATTENUATOR CONTROL				
Switching Depth	46	50	54	dB
Adjustable Range for Switching Depth	24	–	60	dB
Gain Variation in Idle Mode for Both Channels	–	25	–	dB
Current Sourced from SWT T_X Mode	7.0	10	13	µA
Current Sunk into SWT R_X Mode	7.0	10	13	µA

PIN FUNCTION DESCRIPTION

Pin		Name	Description
SDIP–42	TQFP–52		
1	47	V_{CC}	Supply Output for Loudspeaker Amplifier and Peripherals
2	48	VLN	Line Connection Input
3	49	VHF	Supply Output for Speakerphone Section and Base Microphone
4	50	VMC	Supply Output for Handset Microphone
–	51	N/C	Not Connected
–	52	N/C	Not Connected
5	1	SLB	SLP Buffered Output
6	2	REG	Regulation of Line Voltage Adjustment
7	3	SLP	DC Slope Adjustment
8	4	MFI	DTMF Input
9	5	HM1	Handset Microphone Input 1
10	6	HM2	Handset Microphone Input 2
11	7	BM2	Base Microphone Input 2
12	8	BM1	Base Microphone Input 1
13	9	V_{DD}	Supply Input for Speech Part
14	10	TSA	Transmit Sensitivity Adjustment
15	11	TSE	Transmit Signal Envelope Timing Adjustment
16	12	TBN	Transmit Background Noise Envelope Timing Adjustment
17	13	$\overline{MUT}$	Transmit and Receive Mute Input
–	14	N/C	Not Connected
–	15	N/C	Not Connected
18	16	SPS	Speakerphone Select Input
19	17	$\overline{PRS}$	Privacy Switch Input
20	18	SWT	Switch–Over Timing Adjustment
21	19	$\overline{LSM}$	Loudspeaker Mute Input

For More Information On This Product,
Go to: www.freescale.com

Freescale Semiconductor, Inc.

Downloaded from Elcodis.com electronic components distributor

PIN FUNCTION DESCRIPTION (continued)

Pin		Name	Description
SDIP–42	TQFP–52		
–	20	N/C	Not Connected
22	21	RXS	Receive Amplifier Stability
23	22	RXO	Receive Amplifier Output
24	23	GRX	Earpiece Amplifier Feedback Input
25	24	RXI	Receive Amplifier Input
–	25	N/C	Not Connected
–	26	N/C	Not Connected
26	27	RBN	Receive Background Noise Envelope Timing Adjustment
27	28	RSE	Receive Signal Envelope Timing Adjustment
28	29	RSA	Receive Sensitivity Adjustment
29	30	RLS	Receive Output for Loudspeaker Amplifier
30	31	Gnd	Small Signal Ground
31	32	AGC	Line Length AGC Adjustment
32	33	REF	Reference Current Set
33	34	SWD	Switching Depth Adjustment for Handsfree
34	35	VOL	Volume Control Adjustment
35	36	LSI	Loudspeaker Amplifier Input
36	37	PPL	Peak–to–Peak Limiter Timing Adjustment
37	38	BVO	Bias Voltage for Loudspeaker Amplifier Output
38	39	LSF	Loudspeaker Amplifier Feedback Input
–	40	N/C	Not Connected
–	41	N/C	Not Connected
39	42	LSB	Loudspeaker Amplifier Bootstrap Output
40	43	VLS	Supply Input for Loudspeaker Amplifier
41	44	LSO	Loudspeaker Amplifier Output
42	45	PGD	Power Ground
–	46	N/C	Not Connected

Freescale Semiconductor, Inc.

For More Information On This Product,
Go to: www.freescale.com

Downloaded from Elcodis.com electronic components distributor

DESCRIPTION OF THE CIRCUIT

Based on the typical application circuit as given in Figure 18, the MC33215 will be described in three parts: line driver and supplies, handset operation, and handsfree operation. The data used refer to typical data of the characteristics.

LINE DRIVER AND SUPPLIES

The line driver and supply part performs the ac and dc telephone line termination and provides the necessary supply points.

AC Set Impedance

The ac set impedance of the telephone as created by the line driver and its external components can be approximated with the equivalent circuit shown in Figure 2.

Figure 2. Equivalent of the AC impedance

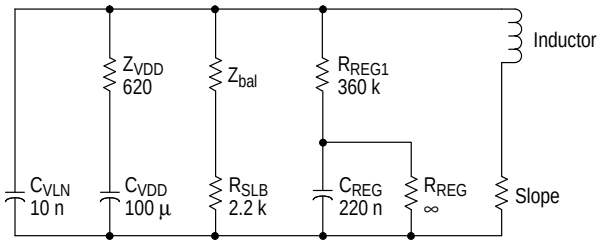

$$\text{Inductor} = R_{REG1} \times C_{REG} \times \frac{R_{SLP}}{11}$$

$$\text{Slope} = \frac{R_{SLP}}{11} \times \left(1 + \frac{R_{REG1}}{R_{REG2}}\right)$$

With the component values of the typical application, the inductor calculates as 1.6 H. Therefore, in the audio range of 300 Hz to 3400 Hz, the set impedance is mainly determined by Z_{VDD}. As a demonstration, the impedance matching or Balance Return Loss BRL is shown in Figure 3.

Figure 3. Balance Return Loss

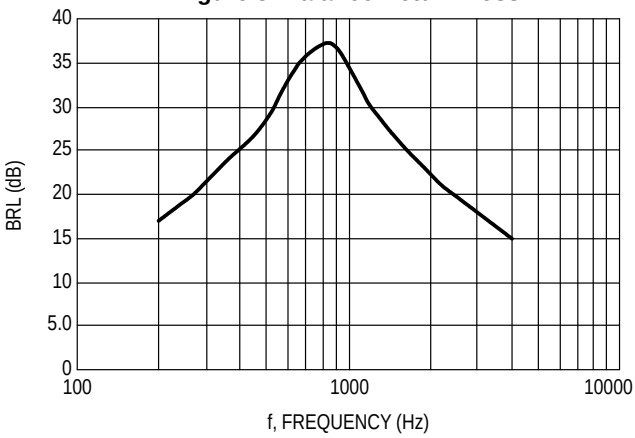

The influence of the frequency dependent parasitic components is seen for the lower frequencies (Inductor) and the higher frequencies (C_{VLN}) by a decreasing BRL value.

DC Set Impedance

The line current flowing towards the MC33215 application is partly consumed by the circuitry connected to V_{DD} while the rest flows into Pin VLN. At Pin VLN, the current is split up into a small part for biasing the internal line drive transistor and into a large part for supplying the speakerphone. The ratio between these two currents is fixed to 1:10. The dc set impedance or dc setting of the telephone as created by the line driver and its external components can be approximated with the equivalent of a zener voltage plus a series resistor according to:

$$VLN = V_{zener} + \left(ILN \times R_{slope}\right)$$

With:

$$V_{zener} = 0.2 \times \left(1 + \frac{R_{REG1}}{R_{REG2}}\right) + \left(10\ \mu A \times R_{REG1}\right)$$

$$ILN = I_{line} - I_{VDD}$$

$$R_{slope} = \frac{R_{SLP}}{11} \times \left(1 + \frac{R_{REG1}}{R_{REG2}}\right)$$

If R_{REG2} is not mounted, the term between the brackets becomes equal to 1.

With the values shown in the typical application and under the assumption that I_{VDD} = 1.0 mA, the above formulas can be simplified to:

$$VLN = 3.8\ V + \left(\left(I_{line} - 1.0\ mA\right) \times 20\right)$$
$$\cong 3.8\ V + \left(I_{line} \times 20\right)$$

In the typical application this leads to a line voltage of 4.2 V at 20 mA of line current with a slope of 20 Ω. Adding a 1.5 V voltage drop for the diode bridge and the interruptor, the dc voltage at tip–ring will equal 5.7 V.

If the dc mask is to be adapted to a country specific requirement, this can be done by adjusting the resistors R_{REG1} and R_{REG2}, as a result, the zener voltage and the slope are varied. It is not advised to change the resistor R_{SLP} since this changes many parameters. The influence of R_{REG1} and R_{REG2} is shown in Figure 4.

Figure 4. Influence of R_{REG1} and R_{REG2} on the DC Mask

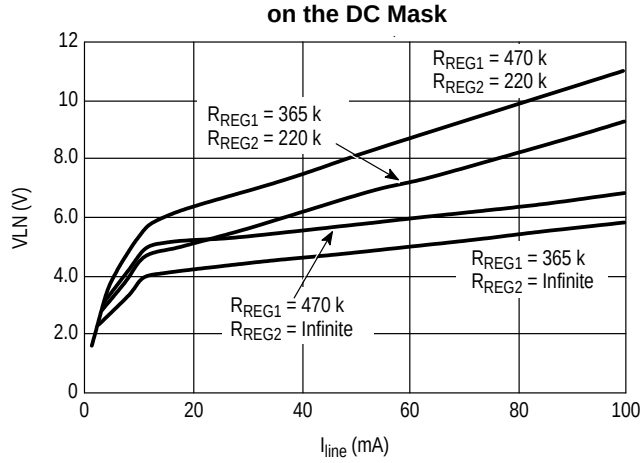

As can be seen in Figure 4, for low line currents below 10 mA, the given dc mask relations are no longer valid. This is the result of an automatic decrease of the current drawn

For More Information On This Product,
Go to: www.freescale.com
Freescale Semiconductor, Inc.
Downloaded from Elcodis.com electronic components distributor

from Pin REG by the internal circuit (the 10 µA term in the formulas). This built–in feature drops the line voltage and therefore enables parallel operation.

The voltage over the line driver has to be limited to 12 V to protect the device. A zener of 11 V at VLN is therefore the maximum advised.

V_{DD} Supply

The internal circuitry for the line driver and handset interface is powered via V_{DD}. This pin may also be used to power peripherals like a dialer or microcontroller. The voltage at V_{DD} is not internally regulated and is a direct result of the line voltage setting and the current consumption at V_{DD} internally (I_{VDD}) and externally (I_{PER}). It follows that:

$$V_{DD} = VLN - \left(I_{VDD} + I_{PER}\right) \times R_{set}$$

For correct operation, it must be ensured that V_{DD} is biased at 1.8 V higher than SLP. This translates to a maximum allowable voltage drop across Z_{VDD} of V_{zener} – 1.8 V. In the typical application, this results in a maximum allowable current consumption by the peripherals of 2.0 mA.

VMC Supply

At VMC, a stabilized voltage of 1.75 V is available for powering the handset microphone. Due to this stabilized supply, microphones with a low supply rejection can be used which reduces system costs. In order to support the parallel operation of the telephone set, the voltage at VMC will be maintained even at very low line currents down to 4.0 mA.

Under normal supply conditions of line currents of 20 mA and above, the supply VMC is able to deliver a guaranteed minimum of 1.0 mA. However, for lower line currents, the supply capability of VMC will decrease.

Figure 5. VMC Under Different Microphone Loads

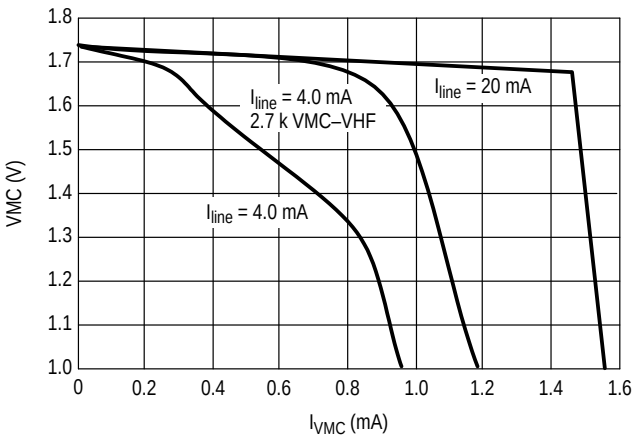

If, during parallel operation, a high current is required from VMC, a 2.7 k resistor between VMC and VHF can be applied. In Figure 5, the VMC voltage under different microphone currents, is shown.

VHF Supply

VHF is a stabilized supply which powers the internal duplex controller part of the MC33215, and which is also meant to power the base microphone or other peripherals. The base microphone however, can also be connected to VMC, which is preferred in case of microphones with a poor supply rejection. Another possibility is to create an additional filter at VHF, like is shown in the typical application. The supply capability of VHF is guaranteed as 2.0 mA for line currents of 20 mA and greater.

Since in parallel operation not enough line current is available to power a loudspeaker and thus having a speakerphone working, the current internally supplied to VHF is cut around 10 mA of line current to save current for the handset operated part. A small hysteresis is built in to avoid system oscillations.

When the current to VHF is cut, the voltage at VHF will drop rapidly due to the internal consumption of 1.4 mA and the consumption of the peripherals. When VHF drops below 2.0 V, the device internally switches to the handset mode, neglecting the state of the speakerphone select Pin SPS.

In case an application contains a battery pack or if it is mains supplied, speakerphone operation becomes possible under all line current conditions. In order to avoid switch–over to handset operation below the 10 mA, VHF has to be supplied by this additional power source and preferably kept above 2.4 V.

V_{CC} Supply

At V_{CC} the major part of the line current is available for powering the loudspeaker amplifier and peripheral circuitry. This supply pin should be looked at as a current source since the voltage on V_{CC} is not stabilized and depends on the instantaneous line voltage and the current to and consumed from V_{CC}.

The maximum portion of the line current which is available at V_{CC} is given by the following relation:

$$I_{VCC} = \left(\frac{10}{11} \times \left(I_{line} - I_{VDD}\right)\right) - I_{VMC} - I_{VHF}$$

This formula is valid when the voltage drop from VLN to V_{CC} is sufficient for the current splitter to conduct all this current to V_{CC}. When the drop is not sufficient, the current source saturates and the surplus of current is conducted to the power ground PGD to avoid distortion in the line driver. In fact, when no current is drawn from V_{CC}, the voltage at V_{CC} will increase until the current splitter is in balance. In Figure 6 this behavior is depicted.

For More Information On This Product,
Go to: www.freescale.com
Freescale Semiconductor, Inc.
Downloaded from Elcodis.com electronic components distributor

Figure 6. Available Current at V_{CC}

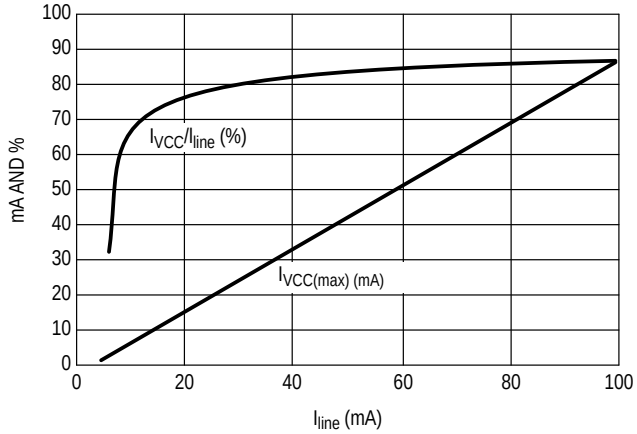

A. Maximum Available Current at V_{CC}

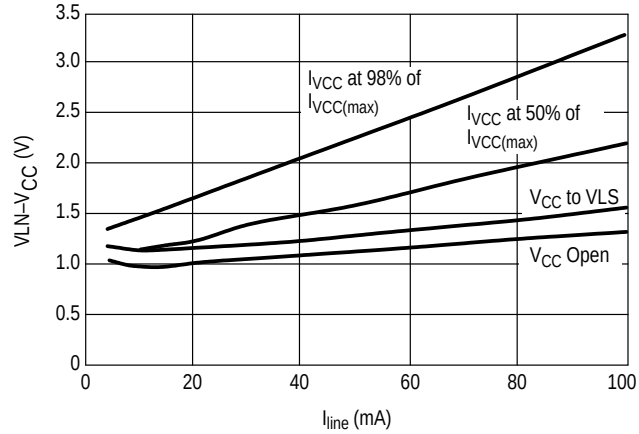

B. Voltage Drop to V_{CC}

For instance, at a line current of 20 mA a maximum of 15 mA of current is available at V_{CC}. If all this current is taken, V_{CC} will be 1.7 V below VLN. When not all this current is drawn from V_{CC}, but for instance only 1.0 mA for biasing of the loudspeaker amplifier, the voltage at V_{CC} will be 1.2 V below VLN. Although the measurements for Figure 6 are done with R_{REG1} = 365 k, the results are also globally valid for other dc settings.

As can be seen from Figure 6, the voltage at V_{CC} is limited by the voltage at VLN minus 1.0 V. This means that the voltage at V_{CC} is limited by the external zener at VLN. If it is necessary to limit the voltage at V_{CC} in order to protect peripheral circuits, a zener from V_{CC} to Gnd can be added. If the supply of the loudspeaker VLS is also connected to V_{CC}, it is advisable that V_{CC} does not exceed 8.0 V.

The high efficiency of the V_{CC} power supply contributes to a high loudspeaker output power at moderate line currents. More details on this can be found in the handsfree operation paragraph.

HANDSET OPERATION

During handset operation, the MC33215 performs the basic telephone functions for the handset microphone and earpiece. It also enables DTMF transmission.

Handset Microphone Amplifier

The handset microphone is to be capacitively connected to the circuit via the differential input HM1 and HM2. The microphone signal is amplified by the HMIC amplifier and modulates the line current by the injection of the signal into the line driver. This transfer from the microphone inputs to the line current is given as $15/(R_{SLP}/11)$, which makes a total transmit voltage gain A_{HM} from the handset microphone inputs to the line of:

$$A_{HM} = \frac{V_{line}}{V_{HM}} = \frac{15}{R_{SLP}/11} \times \frac{Z_{line} \times Z_{set}}{Z_{line} + Z_{set}}$$

With the typical application and Z_{line} = 600 Ω the transmit gain calculates as 47 dB.

In case an electret microphone is used, it can be supplied from the stabilized microphone supply point VMC of 1.75 V properly biased with resistors R_{HM1} and R_{HM2}. This allows the setmaker to use an electret microphone with poor supply rejection to reduce total system costs. Since the transmit gain A_{HM} is fixed by the advised R_{SLP} = 220 Ω and the constraints of set impedance and line impedance, the transmit gain is set by adjusting the sensitivity of the handset microphone by adjusting the resistors R_{HM1} and R_{HM2}. It is not advised to adjust the gain by including series resistors towards the Pins HM1 and HM2.

A high pass filter is introduced by the coupling capacitors C_{HM1} and C_{HM2} in combination with the input impedance. A low pass filter can be created by putting capacitors in parallel with the resistors R_{HM1} and R_{HM2}.

The transmit noise is measured as –72 dBmp with the handset microphone inputs loaded with a capacitively coupled 200 Ω. In a real life application, the inputs will be loaded with a microphone powered by VMC. Although VMC is a stablized supply voltage, it will contain some noise which can be coupled to the handset microphone inputs, especially when a microphone with a poor supply rejection is used. An additional RC filter on VMC can improve the noise figure, see also the base microphone section.

Handset Earpiece Amplifier

The handset earpiece is to be capacitively connected to the RXO output. Here, the receive signal is available which is amplified from the line via the sidetone network and the R_x and EAR amplifiers. The sidetone network attenuates the receive signal from the line via the resistor divider composed of R_{SLB} and Z_{bal}, see also the sidetone section. The attenuation in the typical application by this network equals 24.6 dB. Then the signal from the sidetone network is pre–amplified by the amplifier R_x with a typical gain of 6.0 dB. This amplifier also performs the AGC and MUTE functions, see the related paragraphs. Finally, the signal is amplified by the noninverting voltage amplifier EAR. The overall receive gain A_{RX} from the line to the earpiece output then follows as:

$$A_{RX} = \frac{V_{RXO}}{V_{line}} = A_{ST} \times A_{RXI} \times \left(1 + \frac{R_{RXO}}{R_{GRX}}\right)$$

With: A_{ST} = Attenuation of the Sidetone Network

A_{RXI} = Gain of the Pre–Amplifier R_x

For the typical application an overall gain from the line to the earpiece is close to 0 dB.

The receive gain can be adjusted by adjusting the resistor ratio R_{RXO} over R_{GRX}. However, R_{RXO} also sets the confidence tone level during dialing which leaves R_{GRX} to be chosen freely. A high pass filter is introduced by the coupling capacitor C_{RXI} together with the input impedance of the input

Freescale Semiconductor, Inc.
Downloaded from Elcodis.com electronic components distributor

RXI. A second high pass filtering is introduced by the combination of C_{GRX} and R_{GRX}. A low pass filter is created by C_{RXO} and R_{RXO}. The coupling capacitor at the output RXO is not used for setting a high pass filter but merely for dc decoupling.

In combination with dynamic ear capsules, the EAR amplifier can become unstable due to the highly inductive characteristic of some of the capsules. To regain stability, a 100 nF capacitor can be connected from RXS to Gnd in those cases. An additional 10 nF at the RXI input, as shown in the typical application, improves the noise figure of the receiver stage.

Sidetone Cancellation

The line driver and the receiver amplifier of the MC33215 are tied up in a bridge configuration as depicted in Figure 7. This bridge configuration performs the so–called hybrid function which, in the ideal case, prevents transmitted signals from entering the receive channel.

Figure 7. Sidetone Bridge

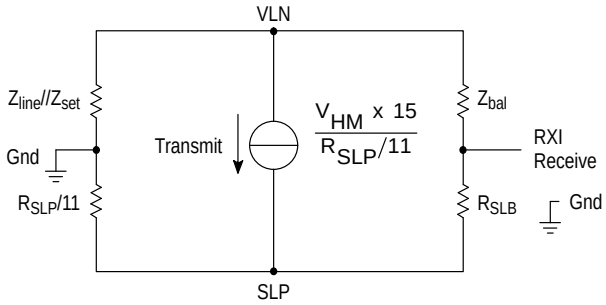

As can be seen from Figure 7 by inspection, the receiver will not pick up any transmit signal when the bridge is in balance, that is to say when:

$$\frac{Z_{bal}}{R_{SLB}} = \frac{Z_{line}//Z_{set}}{R_{SLP}/11}$$

The sidetone suppression is normally measured in an acoustic way. The signal at the earpiece when applying a signal on the microphone is compared with the signal at the earpiece when applying a signal on the line. The suppression takes into account the transmit and receive gains set. In fact the sidetone suppression can be given as a purely electrical parameter given by the properties of the sidetone bridge itself. For the MC33215, this so–called electrical sidetone suppression A_{STE} can be given as:

$$A_{STE} = 1 - \frac{Z_{bal}}{R_{SLB}} \times \frac{R_{SLP}/11}{Z_{line}//Z_{set}}$$

Values of –12 dB or better, thus $A_{STE} < 0.25$, can easily be reached in this way.

Automatic Gain Control

To obtain more or less constant signal levels for transmit and receive regardless of the telephone line length, both the transmit and receive gain can be varied as a function of line current when the AGC feature is used. The gain reduction as a function of line current, and thus line length, is depicted in Figure 8.

Figure 8. Automatic Gain Control

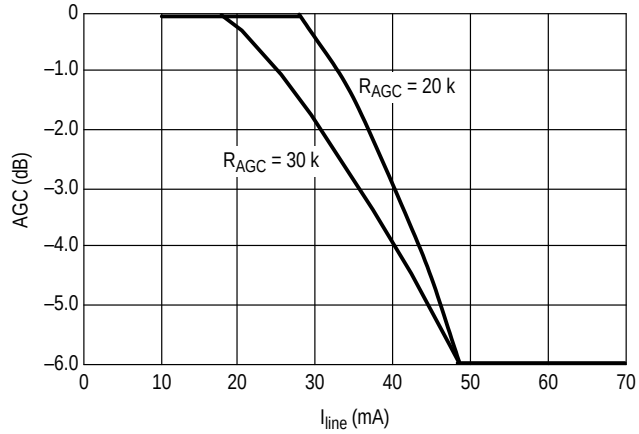

For small line currents, and thus long lines, no gain reduction is applied and thus the transmit and receive gains are at their maximum. For line currents higher than I_{start}, the gain is gradually reduced until a line current I_{stop} is reached. This should be the equivalent of a very short line, and the gain reduction equals 6.0 dB. For higher line currents the gain is not reduced further. For the start and stop currents the following relations are valid:

$$I_{stop} = \frac{1}{R_{SLP}/11}$$

$$I_{start} = \frac{1}{R_{SLP}/11} - \frac{20\ \mu \times R_{AGC}}{R_{SLP}/11}$$

For the typical application, where R_{AGC} = 30 kΩ, the gain will start to be reduced at I_{start} = 20 mA while reaching 6.0 dB of gain reduction at I_{stop} = 50 mA. When AGC is connected to V_{DD}, the AGC function is disabled leading to no gain reduction for any line current. This is also sometimes called PABX mode.

The automatic gain control takes effect in the HMIC and R_x amplifiers as well as in the BMIC amplifier. In this way the AGC is also active in speakerphone mode, see the handsfree operation paragraph.

Privacy and DTMF Mode

During handset operation a privacy and a DTMF mode can be entered according the logic Table 1.

Table 1. Logic Table for Handset Mode

Logic Inputs				Amplifiers					
SPS	$\overline{MUT}$	$\overline{PRS}$	Mode	HMIC	BMIC	DTMF	R_x	RX_{att}	EAR
0	1	1	Handset Normal	On	Off	Off	On	Off	On
0	1	0	Handset Privacy	Off	Off	On	On	Off	On
0	0	X	Handset DTMF	Off	Off	On	Off	Off	On

For More Information On This Product,
Go to: www.freescale.com
Freescale Semiconductor, Inc.
Downloaded from Elcodis.com electronic components distributor

Table 2. Logic Table for Handsfree Mode

Logic Inputs			Mode	Amplifiers					
SPS	$\overline{MUT}$	$\overline{PRS}$		HMIC	BMIC	DTMF	R_x	RX_{att}	EAR
1	1	1	Handsfree Normal	Off	On	Off	On	On	Off
1	1	0	Handsfree Privacy	Off	Off	On	On	On	Off
1	0	X	Handsfree DTMF	Off	Off	On	Off	On	Off

By applying a logic 0 to Pin $\overline{MUT}$, the DTMF mode is entered where the DTMF amplifier is enabled and where the R_x amplifier is muted. A DTMF signal can be sent to the line via the MFI input for which the gain A_{DTMF} is given as:

$$A_{DTMF} = \frac{V_{line}}{V_{MFI}} = \frac{3.75}{R_{SLP}/11} \times \frac{Z_{line} \times Z_{set}}{Z_{line} + Z_{set}}$$

In the typical application, the gain equals 35 dB. The DTMF gain can be controlled by a resistor divider at the input MFI as shown in the typical application. The signal has to be capacitively coupled to the input via C_{MFI} which creates a high pass filter with the input impedance. The line length AGC has no effect on the DTMF gains.

The signal applied to the MFI input is made audible at the earpiece output for confidence tone. The signal is internally applied to the GRX pin where it is amplified via the EAR amplifier which is used as a current to voltage amplifier. The gain is therefore proportional to the feedback resistor R_{RXO}. For R_{RXO} = 180 kΩ the gain equals 6.0 dB. The confidence tone is also audible at the loudspeaker output when the loudspeaker amplifier is activated, see speakerphone operation.

By applying a logic 0 to Pin $\overline{PRS}$, the MC33215 enters privacy mode. In this mode, both handset and handsfree microphone amplifiers are muted while the DTMF amplifier is enabled. Through the MFI input, a signal, for example music on hold, can be sent to the line. In the same way, the MFI input can also be used to couple in signals from, for instance, an answering machine.

HANDSFREE OPERATION

Handsfree operation, including DTMF and Privacy modes, can be performed by making Pin SPS high according Table 2. The handset amplifiers will be switched off while the base amplifiers will be activated. The MC33215 performs all the necessary functions, such as signal monitoring and switch–over, under supervision of the duplex controller.

With the MC33215 also a group listening–in application can be built. For more information on this subject please refer to application note AN1574.

Base Microphone Amplifier

The base microphone can be capacitively connected to the circuit via the differential input BM1 and BM2. The setup is identical to the one for the handset microphone amplifier. The total transmit voltage gain A_{BM} from the base microphone inputs to the line is:

$$A_{BM} = \frac{V_{line}}{V_{BM}} = \frac{37.5}{R_{SLP}/11} \times \frac{Z_{line} \times Z_{set}}{Z_{line} + Z_{set}}$$

With the typical application and Z_{line} = 600 Ω the transmit gain calculates as 55 dB.

The electret base microphone can be supplied directly from VHF but it is advised to use an additional RC filter to obtain a stable supply point, as shown in the typical application. The microphone can also be supplied by VMC. The transmit gain is set by adjusting the sensitivity of the base microphone by adjusting the resistors R_{BM1} and R_{BM2}. It is not advised to adjust the gain by including series resistors towards the Pins BM1 and BM2.

A high pass filter is introduced by the coupling capacitors C_{BM1} and C_{BM2} in combination with the input impedance. A low pass filter can be created by putting capacitors in parallel with the resistors R_{BM1} and R_{BM2}.

Loudspeaker Amplifier

The loudspeaker amplifier of the MC33215 has three major benefits over most of the existing speakerphone loudspeaker amplifiers: it can be supplied and used in a telephone line powered application but also stand alone, it has an all NPN bootstrap output stage which provides maximum output swing under any supply condition, and it includes a peak–to–peak limiter to limit the distortion at the output.

The loudspeaker amplifier is powered at Pin VLS. In telephone line powered applications, this pin should be connected to V_{CC} where most of the line current is available, see the V_{CC} supply paragraph. In an application where an external power supply is used, VLS and thus the loudspeaker amplifier can be powered separately from the rest of the circuit. The amplifier is grounded to PGD, which is the circuits power ground shared by both the loudspeaker amplifier and the current splitter of the V_{CC} supply. Half the supply voltage of VLS is at BVO, filtered with a capacitor to VLS. This voltage is used as the reference for the output amplifier.

The receive signal present at RLS can be capacitively coupled to LSI via the resistor R_{LSI}. The overall gain from RLS to LSO follows as:

$$A_{LS} = \frac{V_{LSO}}{V_{RLS}} = -\frac{R_{LSF}}{R_{LSI}} \times 4.0$$

In the typical application this leads to a loudspeaker gain A_{LS} of 26 dB. The above formula follows from the fact that the overall amplifier architecture from RLS to LSO can be looked at as an inverting voltage amplifier with an internal current gain from LSI to LSF of 4. The input LSI is a signal current summing node which allows other signals to be applied here.

For More Information On This Product,
Go to: www.freescale.com

Freescale Semiconductor, Inc.

Downloaded from Elcodis.com electronic components distributor

Figure 9. Loudspeaker Output Stage

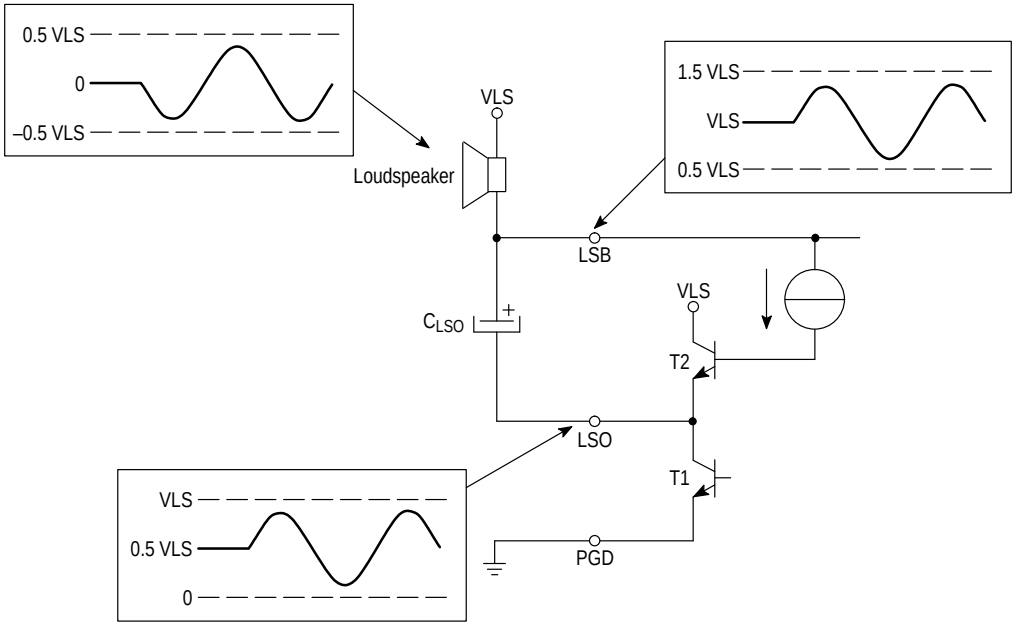

Figure 10. Loudspeaker Amplifier Output Power with External Supply

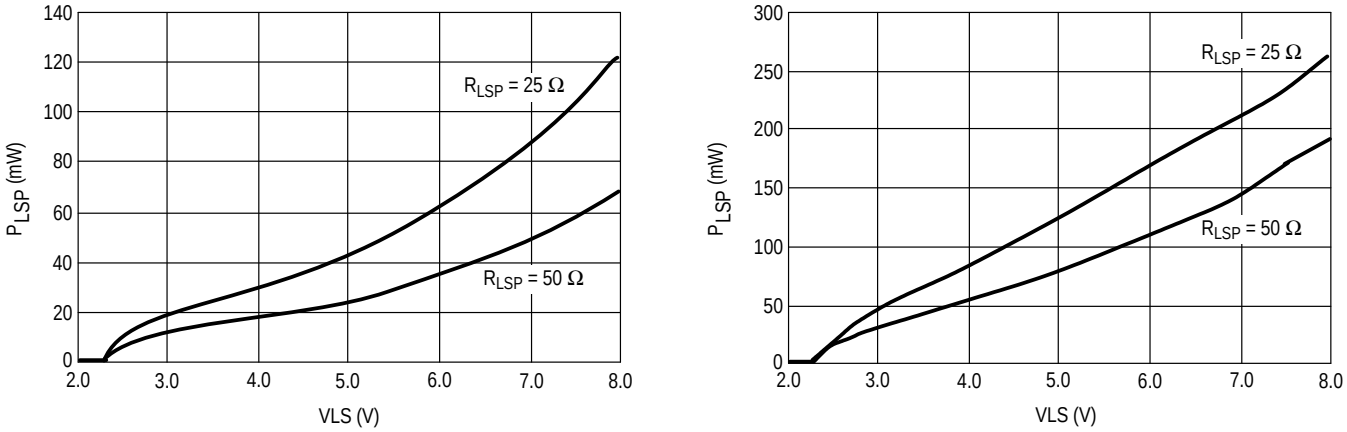

A. Peak–to–Peak Limiter Active

B. Peak–to–Peak Limiter Disabled

The total gain from the telephone line to the loudspeaker output includes, besides the loudspeaker amplifier gain, also the attenuation of the sidetone network and the internal gain from RXI to RLS. When in receive mode, see under duplex controller, the gain from RXI to RLS is maximum and equals 24 dB at maximum volume setting. The attenuation of the sidetone network in the typical application equals 24.6 dB which makes an overall gain from line to loudspeaker of 25.4 dB. Due to the influence of the line length AGC on the R_X amplifier, the gain will be reduced for higher line currents.

The output stage of the MC33215 is a modified all NPN bootstrap stage which ensures maximum output swing under all supply conditions. The major advantage of this type of output stage over a standard rail–to–rail output is the higher stability. The principle of the bootstrap output stage is explained with the aid of Figure 9.

The output LSO is biased at half the supply VLS while the filtering of the loudspeaker with the big capacitor C_{LSO} requires that LSB is biased at VLS. In fact, because of the filtering, LSB is kept at VLS/2 above the LSO output even if LSO contains an ac signal. This allows the output transistor T2 to be supplied for output signals with positive excursions up to VLS without distorting the output signal. The resulting ac signal over the loudspeaker will equal the signal at LSO. As an indication of the high performance of this type of amplifier, in Figure 10, the output power of the loudspeaker amplifier as a function of supply voltage is depicted for 25 Ω and 50 Ω loads with both the peak–to–peak limiter active and disabled. As can be seen, in case the peak–to–peak limiter is disabled, the output power is roughly increased with 6.0 dB, this at the cost of increased distortion levels up to 30%.

In a telephone line powered application, the loudspeaker amplifier output power is limited not only by the supply voltage but also by the telephone line current. This means that in telephones the use of 25 Ω or 50 Ω speakers is preferred over the use of the cheaper 8.0 Ω types. Figure 11 gives the output power into the loudspeaker for a line powered application and two different dc settings with the peak–to–peak limiter active. In case the peak–to–peak limiter is disabled the output power will be increased for the higher line currents up to 6.0 dB.

For More Information On This Product,
Go to: www.freescale.com
Freescale Semiconductor, Inc.
Downloaded from Elcodis.com electronic components distributor

Figure 11. Loudspeaker Amplifier Output Power when Line Powered

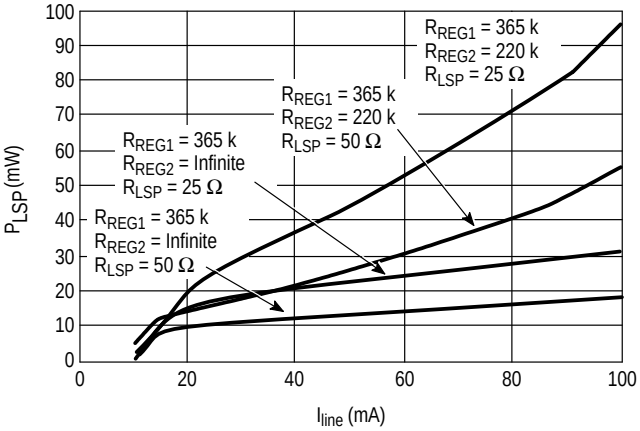

The quality of the audio output of the loudspeaker amplifier is mainly determined by the distortion level. To keep high quality under difficult supply conditions, the MC33215 incorporates a peak–to–peak limiter. The peak–to–peak limiter will detect when the output stage gets close to its maximum output swing and will then reduce the gain from LSI to LSF. The attack and release of the limiter is regulated by the C_{PPL} capacitor. Figure 12 depicts the limiter's attack behavior with C_{PPL} = 100 nF. The release time is given as 3 x C_{PPL} x R_{PPL}. In the typical application this leads to a release time of 300 ms.

Figure 12. Peak–to–Peak Limiter Dynamic Behavior

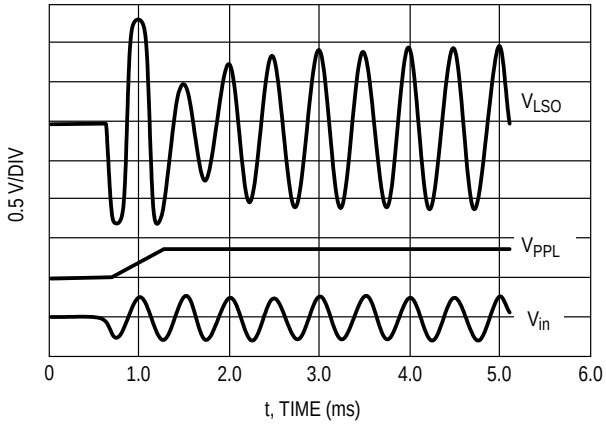

Figure 12 clearly shows that due to the action of the peak–to–peak limiter, the output swing and thus the output power is reduced with respect to the maximum possible as already indicated in Figure 10. The peak–to–peak limiter can be disabled by connecting the PPL pin to ground.

On top of the peak–to–peak limiter, the MC33215 incorporates a supply limiter, which reduces the gain rapidly when the supply voltage VLS drops too much. This will avoid malfunctioning of the amplifier and unwanted oscillations. The voltage drop is detected via the BVO input and for that reason the C_{BVO} has to be connected to VLS and not to Gnd.

The amplifier can be activated by making Pin $\overline{LSM}$ high. In the typical application this pin is connected to SPS, which activates the loudspeaker amplifier automatically when the speakerphone mode is entered. When $\overline{LSM}$ is made low, the loudspeaker amplifier is muted which is needed for correct handset operation.

The volume of the loudspeaker signal can be varied via a potentiometer at VOL. A fixed current of 10 μA is running through the potentiometer and the resulting voltage at VOL is a measure for the gain reduction. The relation between the voltage at VOL and the obtained gain reduction is given in Figure 13.

Figure 13. Volume Reduction

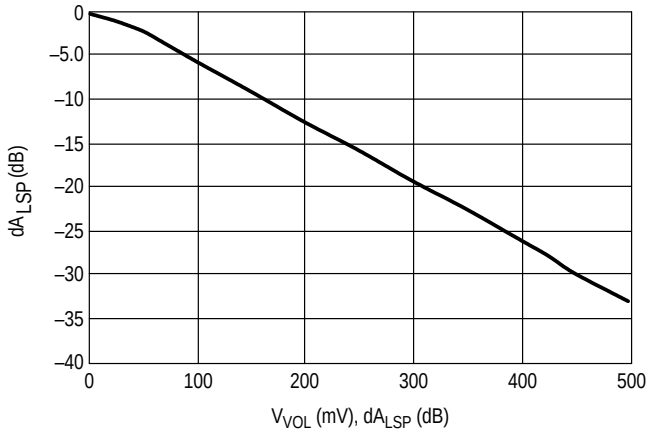

It can be seen from Figure 13 that a linear variation of R_{VOL} will give a logarithmic gain reduction which adapts better to the human ear than a linear gain reduction.

During DTMF dialing, see Table 2, a confidence tone is audible at the loudspeaker of which the level is proportional to the feedback resistor R_{LSF} only. At R_{LSF} = 180 kΩ the gain from MFI to LSO equals 28.5 dB.

Half Duplex Controller

To avoid howling during speakerphone operation, a half duplex controller is incorporated. By monitoring the signals in both the transmit and receive channel the duplex controller will reduce the gain in the channel containing the smallest signal. A typical gain reduction will be between 40 dB and 52 dB depending on the setting, see below. In case of equal signal levels or by detection of noise only, the circuit goes into idle mode. In this mode the gain reduction in both channels is halfway, leading to 20 dB to 26 dB of reduction.

In a speakerphone built around the MC33215, following the signal path from base microphone to the line and via sidetone, loudspeaker and acoustic coupling back to the microphone, the loop gain can be expressed as a sum of the gains of the different stages. However, since the transmit and receive gains are dependent on AGC and the sidetone suppression is dependent on matching with the different lines we are mostly interested by the maximum possible loop gain $A_{LOOP(max)}$. It follows:

$A_{LOOP(max)} = A_{BMRX(max)} + A_{RXBM(max)} – A_{SWD}$ (dB)

With: $A_{BMRX(max)}$ = Maximum gain from BM1 and BM2 to RXI as a function of line length AGC and line impedance matching

$A_{RXBM(max)}$ = Maximum gain from RXI to BM1 and BM2 as a function of line length AGC and acoustic coupling

Freescale Semiconductor, Inc.
Downloaded from Elcodis.com electronic components distributor

A_{SWD} = Switching depth as performed in the attenuators

To avoid howling, the maximum possible loop gain should be below 0 dB and preferably below –10 dB for comfort. In a practical telephone design, both the $A_{BMRX(max)}$ and the $A_{RXBM(max)}$ will be less than 20 dB thus a switching depth of 50 dB will give a loop gain of less than –10 dB. An optimized sidetone network is of high importance for handsfree operation. The better the network matches with the telephone line the less local feedback and the smaller the switching range can be.

The amount of gain reduction A_{SWD} obtained by the duplex controller is set via resistor R_{SWD} according:

$$A_{SWD} = 20\log\left(\frac{3.6 \times R_{SWD}}{R_{REF}}\right)^2 \text{(dB)}$$

In the typical application the gain reduction will be 50 dB.

To compare the transmit and receive signals with each other, they have to be monitored. This is done by making a signal envelope and a background noise envelope via the C_{TSE}, C_{TBN} capacitors for the transmit channel and via the C_{RSE}, C_{RBN} capacitors for the receive channel. In Figure 14, a schematic behavior of the envelopes is depicted which is equal for both transmit and receive.

The voltage signal at the input is first transferred to a current via the sensitivity adjust network. Then this current is led through a diode which gives a logarithmic compression in voltage. It is this voltage from which the signal envelope is created by means of asymmetric charge and discharge of the signal envelope capacitor. The noise envelope voltage then follows in a similar way. Based on the envelope levels, the MC33215 will switch to transmit, receive or idle mode following Table 3. The fact that in receive mode the signal on the base microphone is greater than it is in case of transmit mode, due to the coupling of the high loudspeaker signal, is automatically taken into account.

In the table, two particulars can be found. At first, the set will go to idle mode if the signals are not at least 4.5 dB greater then the noise floor, which calculates as a 13 mV voltage difference in envelopes. This avoids continuous switching over between the modes under slight variations of the background noise due to, for instance, typing on a keyboard. Second, a dial tone detector threshold is implemented to avoid that the set goes to idle mode in presence of a continuous strong receive signal like a dial tone. The dial tone detector threshold is proportional to the R_{RSA} resistor. In the typical application with R_{RSA} = 3.3 kΩ, the threshold is at 1.26 mVrms at the input RXI or 20 mVrms at the line. Line length AGC is of influence on the dial tone detector threshold, increasing the level depending on the line current with a maximum of 6.0 dB.

In order to perform a correct comparison between the signal strengths, the sensitivity of the envelope detectors can be adjusted via the resistors connected to TSA and RSA. Based on the above, and on the fact that there is an effective gain of 20 dB in the transmit monitor, it can be derived that for stable operation the following two relations are valid:

$$20\log\left(R_{TSA}\right) < 20\log\left(R_{RSA}\right) - A_{BMRX(max)} + 20 \text{ (dB)}$$

$$20\log\left(R_{TSA}\right) > 20\log\left(R_{RSA}\right) - A_{RXBM(max)} - A_{SW} + 20 \text{ (dB)}$$

By measuring the gains and choosing the R_{RSA}, the limits for R_{TSA} follow. The choice for the sensitivity resistors is not completely free. The logarithmic compressors and the amplifier stages have a certain range of operation and, on the receive side, the choice for R_{RSA} is given by the desired dial tone detector threshold. Figure 15 indicates the available dynamic range for the selected value of the sensitivity resistors.

Figure 14. Signal and Noise Envelopes

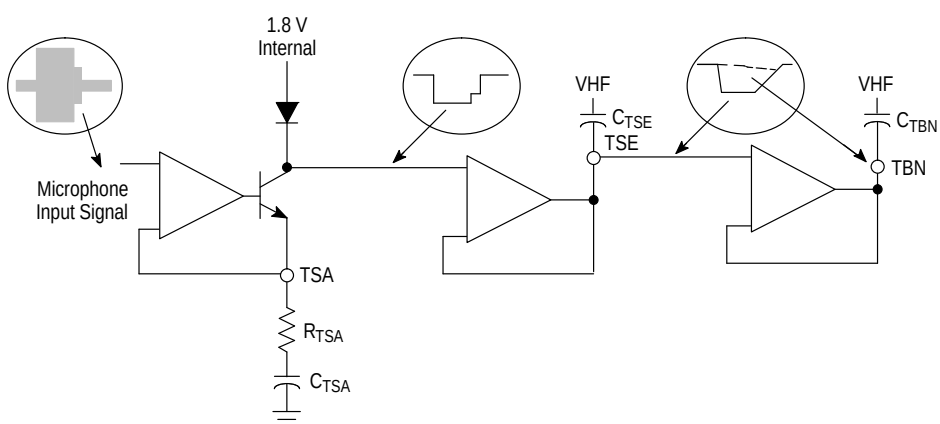

For More Information On This Product,
Go to: www.freescale.com
Freescale Semiconductor, Inc.
Downloaded from Elcodis.com electronic components distributor

Table 3. Logic Table for Switch–Over

TSE > RSE	TSE > TBN + 13 mV	RSE > V_{DDT}	RSE > RBN + 13 mV	Mode
1	1	X	X	Transmit
1	0	X	X	Idle
0	X	1	X	Receive
0	X	0	1	Receive
0	X	0	0	Idle

The resistors for the sensitivity setting have to be coupled capacitively to the pins for dc decoupling, and also to create a high pass filter to suppress low frequent background noises like footsteps and 50 Hz.

The switch–over timing is performed by charging and discharging the C_{SWT} capacitor. The switch–over from transmit to receive or vice versa is fast, on the order of milliseconds, and is proportional to the value of C_{SWT}. The switch–over to idle mode is slow, in the order of a few seconds, and is proportional to the product of the values of R_{SWT} and C_{SWT}. Figure 16 depicts a typical switch–over behavior when applying transmit and receive stimuli.

The electrical characteristics and the behavior of the MC33215 are not the only factor in designing a handsfree speakerphone. During the design the acoustics have to be taken into account from the beginning. The choice of the transducers and the design of the cabinet are of great influence on the speakerphone performance. Also, to achieve a proper handsfree operation, the fine tuning of the components around the duplex controller have to be done with the final choice of the cabinet and the transducers.

Figure 15. Compression Range of the Signal Monitors

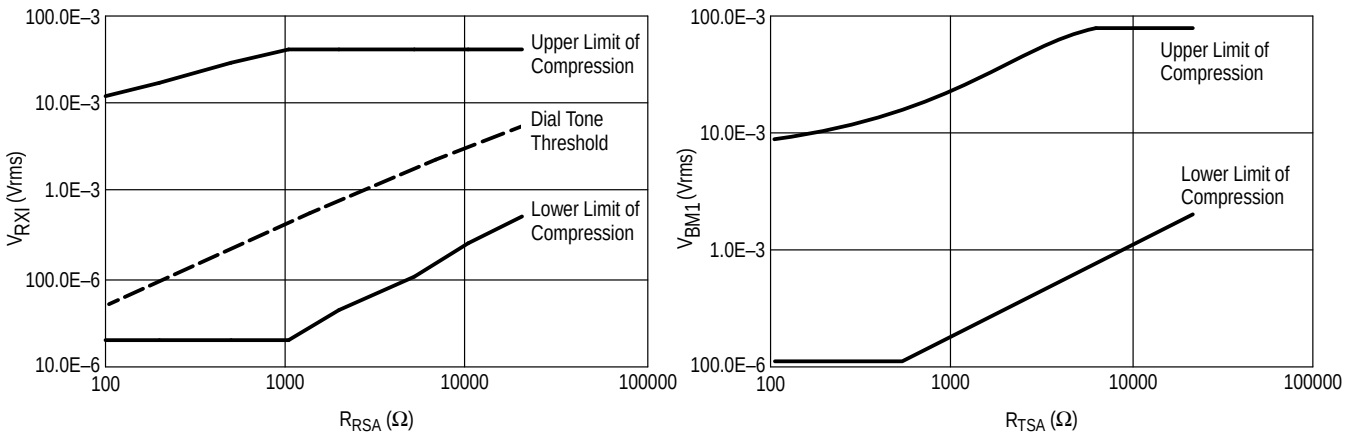

A. Receive Monitor **B. Transmit Monitor**

Figure 16. Switch–Over Behavior

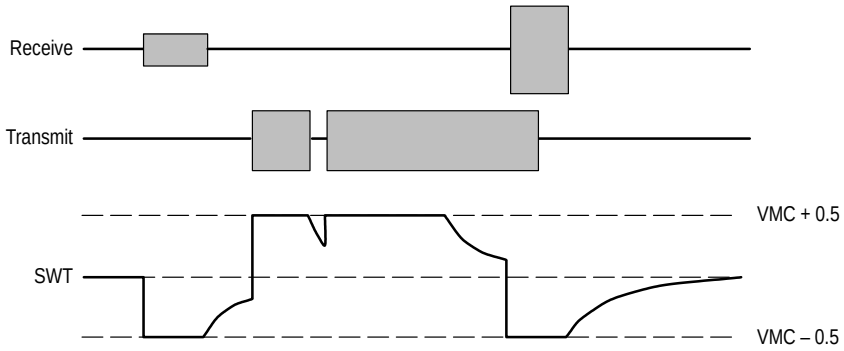

Freescale Semiconductor, Inc.
Downloaded from Elcodis.com electronic components distributor

Figure 17. Test Circuit

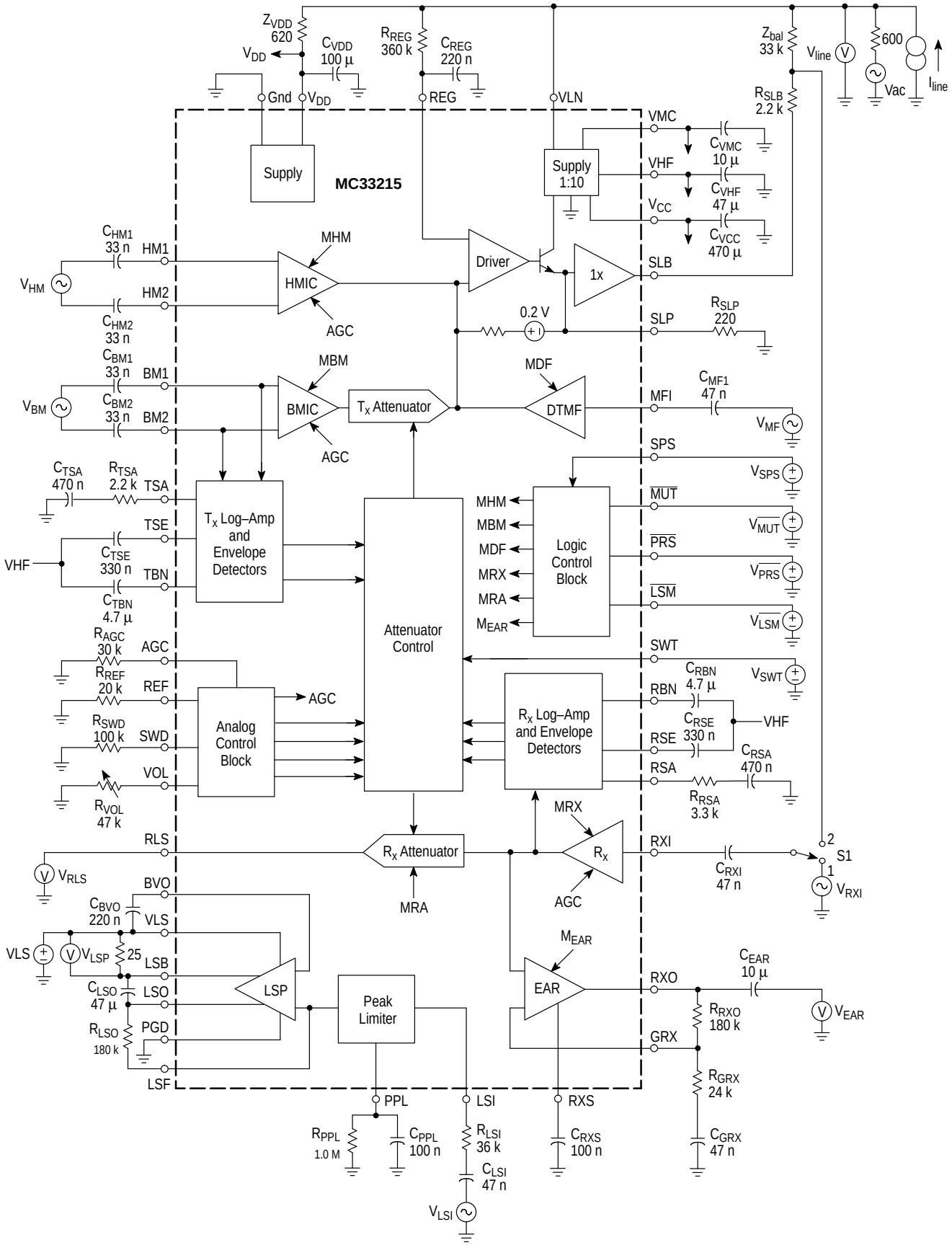

For More Information On This Product,
Go to: www.freescale.com

Freescale Semiconductor, Inc.

Downloaded from Elcodis.com electronic components distributor

Figure 18. Typical Application

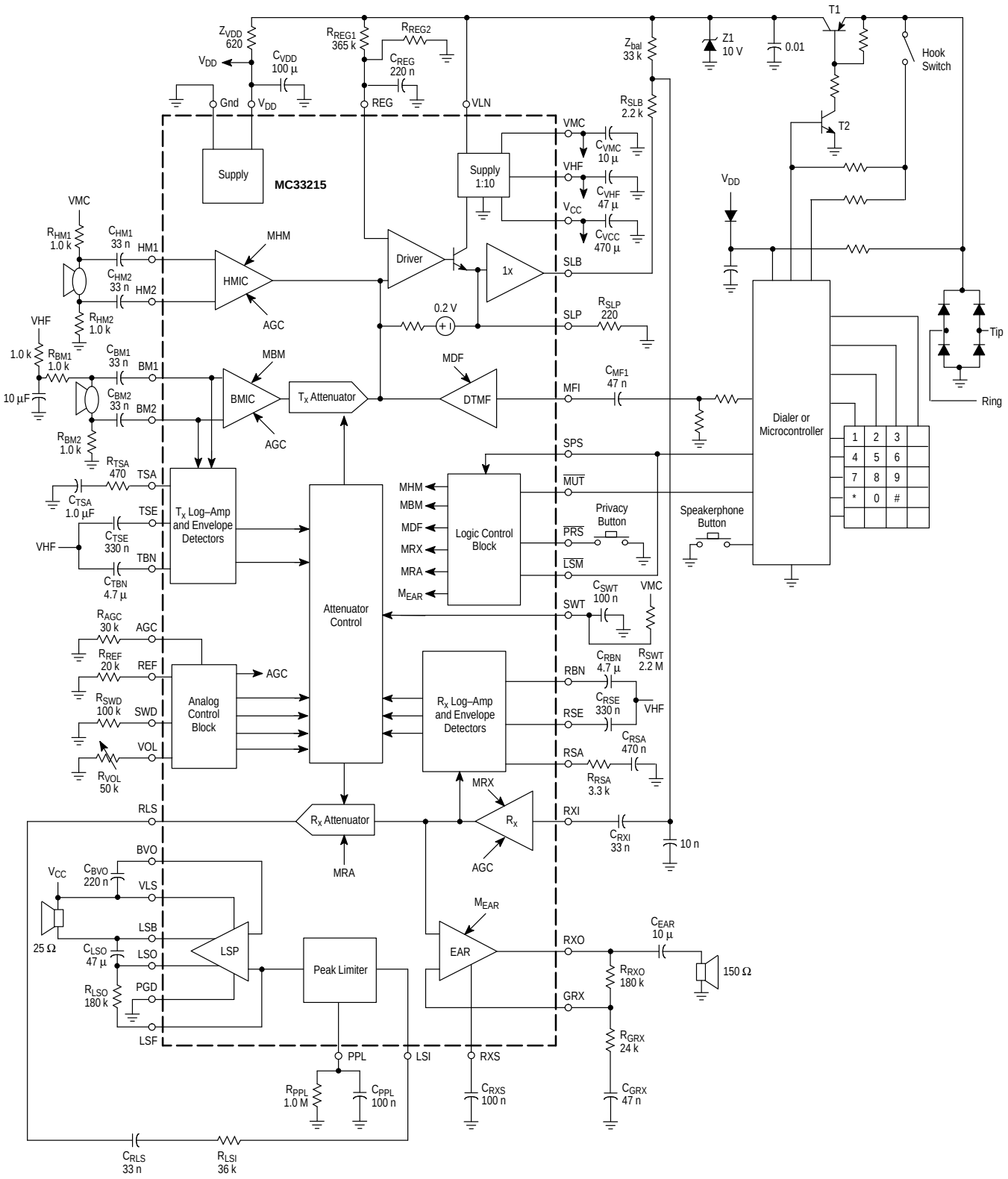

Freescale Semiconductor, Inc.

Downloaded from Elcodis.com electronic components distributor

OUTLINE DIMENSIONS

FB SUFFIX
PLASTIC PACKAGE
CASE 848B–04
(TQFP–52)
ISSUE C

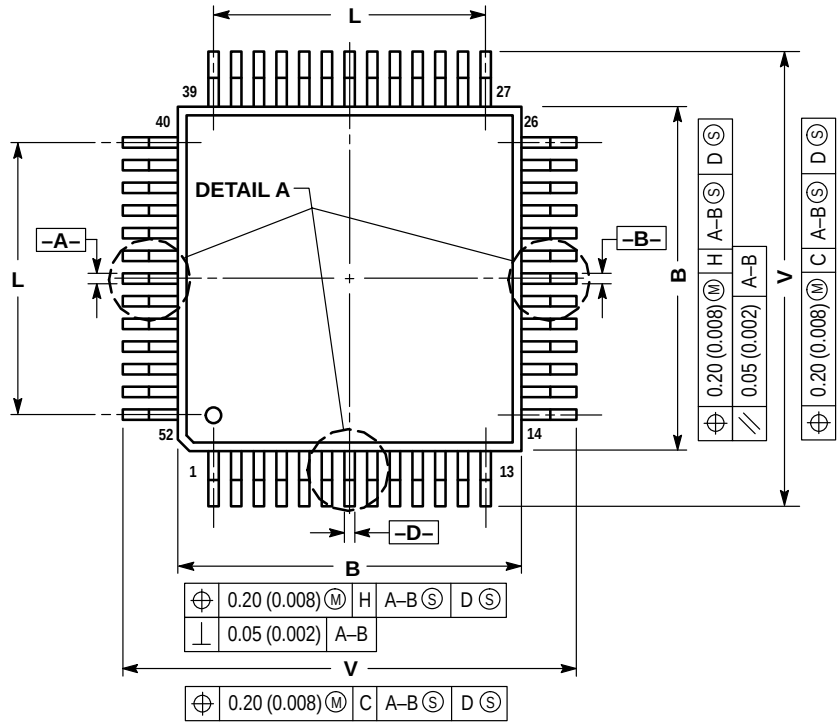

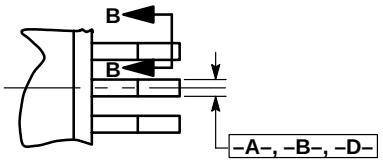

DETAIL A

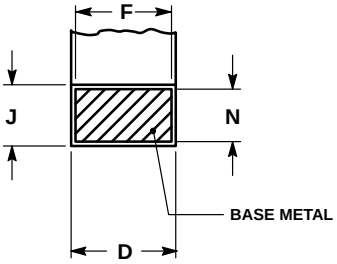

0.02 (0.008) M C A–B S D S

SECTION B–B

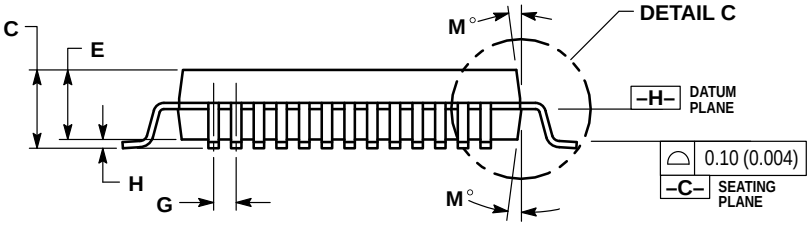

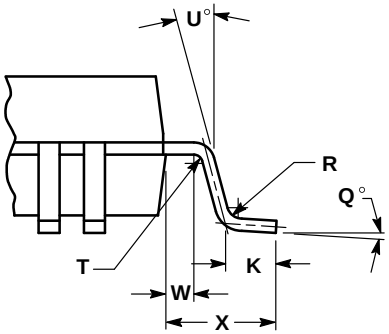

DETAIL C

NOTES:
1. DIMENSIONING AND TOLERANCING PER ANSI Y14.5M, 1982.
2. CONTROLLING DIMENSION: MILLIMETER.
3. DATUM PLANE –H– IS LOCATED AT BOTTOM OF LEAD AND IS COINCIDENT WITH THE LEAD WHERE THE LEAD EXITS THE PLASTIC BODY AT THE BOTTOM OF THE PARTING LINE.
4. DATUMS –A–, –B– AND –D– TO BE DETERMINED AT DATUM PLANE –H–.
5. DIMENSIONS S AND V TO BE DETERMINED AT SEATING PLANE –C–.
6. DIMENSIONS A AND B DO NOT INCLUDE MOLD PROTRUSION. ALLOWABLE PROTRUSION IS 0.25 (0.010) PER SIDE. DIMENSIONS A AND B DO INCLUDE MOLD MISMATCH AND ARE DETERMINED AT DATUM PLANE –H–.
7. DIMENSION D DOES NOT INCLUDE DAMBAR PROTRUSION. ALLOWABLE DAMBAR PROTRUSION SHALL BE 0.08 (0.003) TOTAL IN EXCESS OF THE D DIMENSION AT MAXIMUM MATERIAL CONDITION. DAMBAR CANNOT BE LOCATED ON THE LOWER RADIUS OR THE FOOT.

	MILLIMETERS		INCHES	
DIM	MIN	MAX	MIN	MAX
A	9.90	10.10	0.390	0.398
B	9.90	10.10	0.390	0.398
C	2.10	2.45	0.083	0.096
D	0.22	0.38	0.009	0.015
E	2.00	2.10	0.079	0.083
F	0.22	0.33	0.009	0.013
G	0.65 BSC		0.026 BSC	
H	—	0.25	—	0.010
J	0.13	0.23	0.005	0.009
K	0.65	0.95	0.026	0.037
L	7.80 REF		0.307 REF	
M	5°	10°	5°	10°
N	0.13	0.17	0.005	0.007
Q	0°	7°	0°	7°
R	0.13	0.30	0.005	0.012
S	12.95	13.45	0.510	0.530
T	0.13	—	0.005	—
U	0°	—	0°	—
V	12.95	13.45	0.510	0.530
W	0.35	0.45	0.014	0.018
X	1.6 REF		0.063 REF	

For More Information On This Product,
Go to: www.freescale.com
Freescale Semiconductor, Inc.
Downloaded from Elcodis.com electronic components distributor

OUTLINE DIMENSIONS

B SUFFIX
PLASTIC PACKAGE
CASE 858–01
(SDIP–42)
ISSUE O

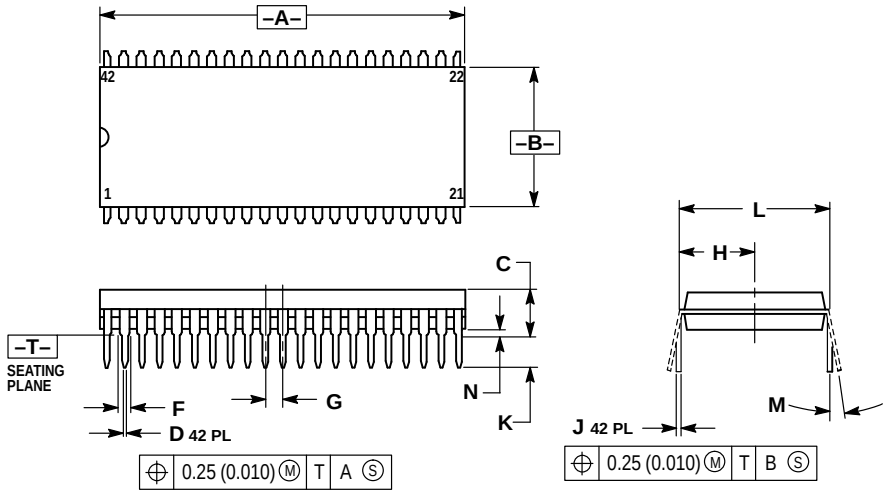

NOTES:
1. DIMENSIONING AND TOLERANCING PER ANSI Y14.5M, 1982.
2. CONTROLLING DIMENSION: INCH.
3. DIMENSION L TO CENTER OF LEAD WHEN FORMED PARALLEL.
4. DIMENSIONS A AND B DO NOT INCLUDE MOLD FLASH. MAXIMUM MOLD FLASH 0.25 (0.010).

	INCHES		MILLIMETERS	
DIM	MIN	MAX	MIN	MAX
A	1.435	1.465	36.45	37.21
B	0.540	0.560	13.72	14.22
C	0.155	0.200	3.94	5.08
D	0.014	0.022	0.36	0.56
F	0.032	0.046	0.81	1.17
G	0.070 BSC		1.778 BSC	
H	0.300 BSC		7.62 BSC	
J	0.008	0.015	0.20	0.38
K	0.115	0.135	2.92	3.43
L	0.600 BSC		15.24 BSC	
M	0 °	15 °	0 °	15 °
N	0.020	0.040	0.51	1.02

Motorola reserves the right to make changes without further notice to any products herein. Motorola makes no warranty, representation or guarantee regarding the suitability of its products for any particular purpose, nor does Motorola assume any liability arising out of the application or use of any product or circuit, and specifically disclaims any and all liability, including without limitation consequential or incidental damages. “Typical” parameters which may be provided in Motorola data sheets and/or specifications can and do vary in different applications and actual performance may vary over time. All operating parameters, including “Typicals” must be validated for each customer application by customer’s technical experts. Motorola does not convey any license under its patent rights nor the rights of others. Motorola products are not designed, intended, or authorized for use as components in systems intended for surgical implant into the body, or other applications intended to support or sustain life, or for any other application in which the failure of the Motorola product could create a situation where personal injury or death may occur. Should Buyer purchase or use Motorola products for any such unintended or unauthorized application, Buyer shall indemnify and hold Motorola and its officers, employees, subsidiaries, affiliates, and distributors harmless against all claims, costs, damages, and expenses, and reasonable attorney fees arising out of, directly or indirectly, any claim of personal injury or death associated with such unintended or unauthorized use, even if such claim alleges that Motorola was negligent regarding the design or manufacture of the part. Motorola and Ⓜ are registered trademarks of Motorola, Inc. Motorola, Inc. is an Equal Opportunity/Affirmative Action Employer.

Mfax is a trademark of Motorola, Inc.

How to reach us:
USA / EUROPE / Locations Not Listed: Motorola Literature Distribution;
P.O. Box 5405, Denver, Colorado 80217. 303–675–2140 or 1–800–441–2447

Mfax™: RMFAX0@email.sps.mot.com – TOUCHTONE 602–244–6609
– US & Canada ONLY 1–800–774–1848

INTERNET: http://www.mot.com/SPS/

JAPAN: Nippon Motorola Ltd.; Tatsumi–SPD–JLDC, 6F Seibu–Butsuryu–Center, 3–14–2 Tatsumi Koto–Ku, Tokyo 135, Japan. 81–3–3521–8315

ASIA / PACIFIC: Motorola Semiconductors H.K. Ltd.; 8B Tai Ping Industrial Park, 51 Ting Kok Road, Tai Po, N.T., Hong Kong. 852–26629298

MOTOROLA

Freescale Semiconductor, Inc.

Downloaded from Elcodis.com electronic components distributor