Alle Rechte vorbehalten/ *All rights reserved*

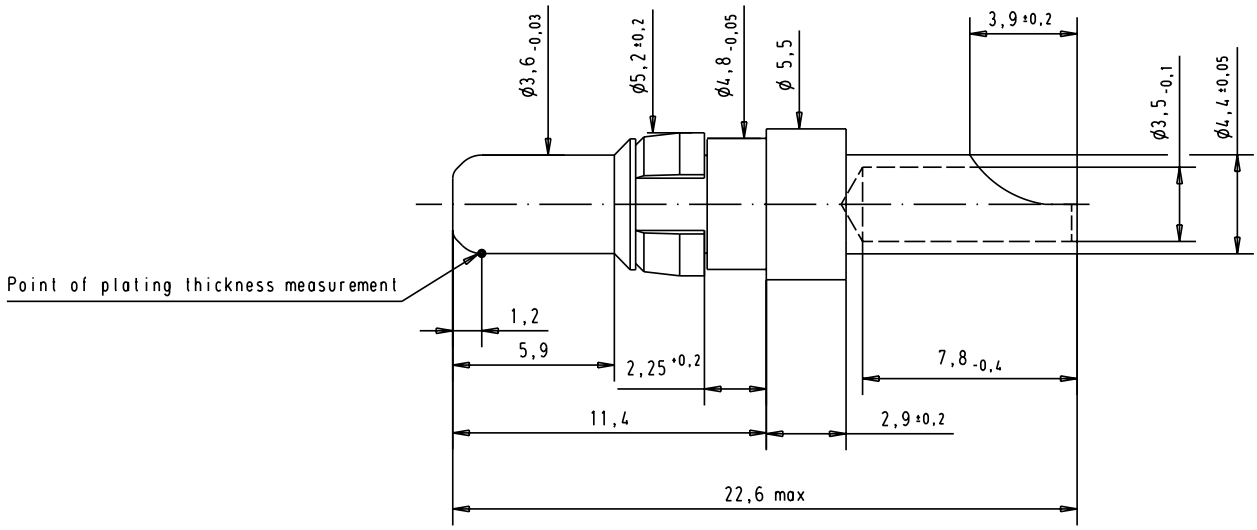

Part number	Plating		Mod.	Dat.	Name
09692817422	Mating area	0,2 µm Au			
	Termination area	5 µm Sn			
09692815422	Mating area	0,8 µm Au			
	Termination area	0,2 µm Au	31057	21-JUN-02	CV

	Dat.	Name
Detail.	21-JUN-02	CV
Insp.		
Stand.		

All Dim. in mm
Orig. Size DIN A 4

HARTING EURL
F-95972 Paris

Male Hight power contact, 30A straight cable terminaison, solder

TB 09 69 281 x422

Sub.

Maßstab/ *Scale* 5:1

Blatt/ *Page* 1/1

Downloaded from Elcodis.com electronic components distributor