THIS COPY IS PROVIDED ON A RESTRICTED BASIS AND IS NOT TO BE USED IN ANY WAY DETRIMENTAL TO THE INTERESTS OF PANDUIT CORP.

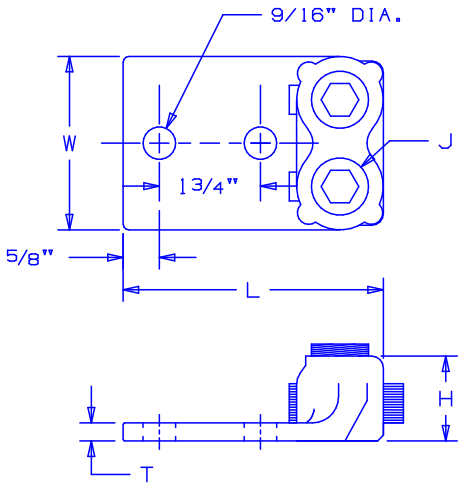

NOTES:

1. TIN PLATED BODY MADE OF HIGH STRENGTH CORROSION RESISTANT COPPER ALLOY, WITH CADMIUM PLATED STEEL SCREWS
2. SERRATED BARRELS FOR IMPROVED WIRE PULL OUT.
3. FOR COPPER WIRE ONLY
4. MADE IN THE USA.

PANDUIT PART NUMBER	CONDUCTOR RANGE	WIRE DIAMETER RANGE	APPROXIMATE DIMENSIONS									WRENCH SIZE	TORQUE VALUE
			H		L		T		W		J		
		in	in	mm	in	mm	in	mm	in	mm	in		IN-LBS
P2NLT-500-3	4 SOLID-500kcmil	.204-.815	1.47	37	4.50	114	.38	10	2.50	64	15/16-16	3/8	375

C41357_00

REV	DATE	BY	CHK	DESCRIPTION	ECN #	PM	CUST
00	11/02	CJW		DRAWING RELEASED			

PANDUIT CORP. TINLEY PARK, ILLINOIS

DUAL BARREL BRONZE CONNECTOR
CUSTOMER DRAWING

DRAWN BY	CHK'D	SCALE	DRAWING NO.
CJW		NONE	C41357

Downloaded from Elcodis.com electronic components distributor