THIS DRAWING IS UNPUBLISHED. RELEASED FOR PUBLICATION 20

© COPYRIGHT 20 BY TYCO ELECTRONICS CORPORATION. ALL RIGHTS RESERVED.

LOC	DIST
HM	00

REVISIONS

P	LTR	DESCRIPTION	DATE	DWN	APVD
	A	RLSD; NPR NSD07-065	25JUN2007	GG	SH

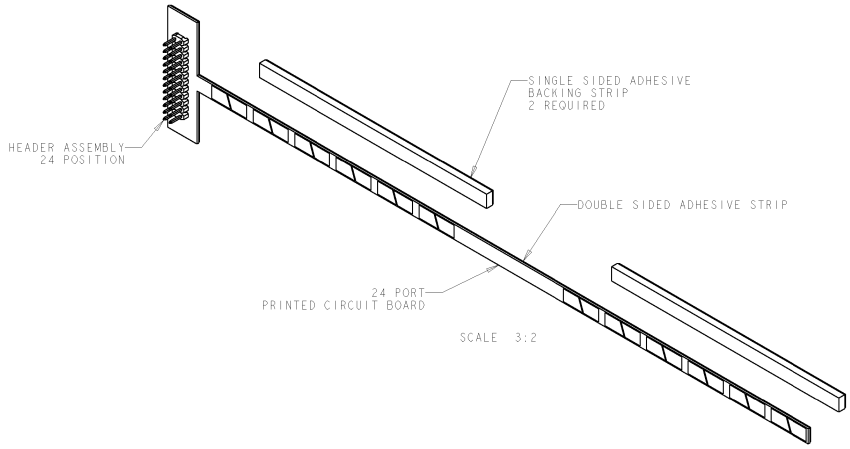

1. MATERIAL:
PRINTED CIRCUIT BOARD - LAMINATED PLASTIC FR-4, 0.57 [.022] THICK.
ADHESIVE TAPE - MYLAR, 0.25 [.010] THICK.
BACKING STRIP ASSEMBLY - FR-4 WITH MYLAR, 2.4 [.094] THICK.
HOUSING - THERMOPLASTIC, UL94V-0, BLACK.
CONTACTS - COPPER ALLOY.

2. ALL DIMENSIONS SHOWN ARE NOMINAL.

3. PARENTHESIS ( ) ARE FOR REFERENCE ONLY. NOT SHOWN ON BOARD.

4. (P_) CALLOUTS ARE FOR PIN TO PAD REFERENCE ONLY.

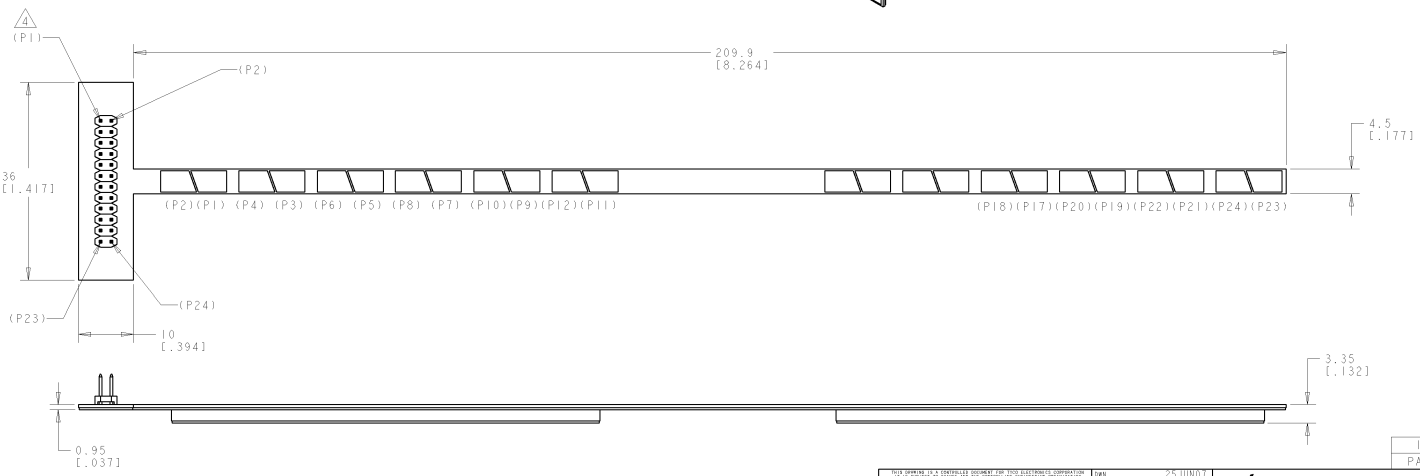

1933430-1
PART NUMBER

THIS DRAWING IS A CONTROLLED DOCUMENT FOR TYCO ELECTRONICS CORPORATION IT IS SUBJECT TO CHANGE AND THE CONTROLLING ORGANIZATION SHOULD BE CONTACTED FOR THE LATEST REVISION

DIMENSIONS: MM[INCHES]

TOLERANCES UNLESS OTHERWISE SPECIFIED:
0 PLC ±-
1 PLC ±-
2 PLC ±-
3 PLC ±-
4 PLC ±-
ANGLES ±-
FINISH -

MATERIAL 1 -

DWN G. GARRETT 25JUN07
CHK S. HERNDON 25JUN07
APVD S. HERNDON 25JUN07
PRODUCT SPEC -
APPLICATION SPEC -
WEIGHT -

tyco Electronics
Tyco Electronics
Harrisburg, PA 17105-3608

NAME AMPTRAC SENSOR, PCB, 24 PORT
-
-

SIZE	CAGE CODE	DRAWING NO	RESTRICTED TO
A2	00779	C-1933430	-

CUSTOMER DRAWING SCALE 2:1 SHEET 1 OF 1 REV A

AMP 1471-X REV 31MAR2000

Pro/ENGINEER DRAWING

Downloaded from Elcodis.com electronic components distributor