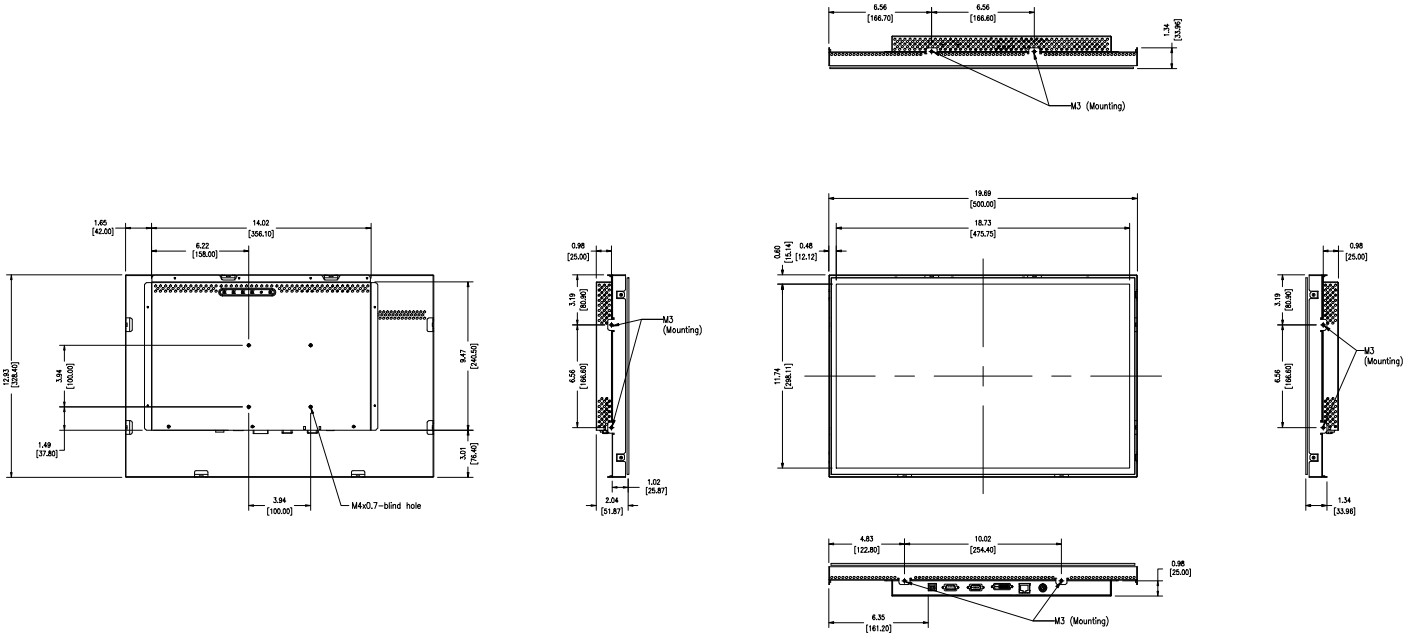

REV	CHANGE NOTICE	DATE	DRN
01	INITIAL RELEASE PER CO 031487	2/10	MTD

UNITS: INCHES [MM]

TOLERANCES UNLESS OTHERWISE SPECIFIED
.X ±
.XX ±
.XXX ±
ANGLES ±

THIRD ANGLE PROJECTION

DO NOT SCALE DRAWING

SCALE 1 = 1

3M TOUCH SYSTEMS
METHUEN, MA
USA

COPYRIGHT 2010
THIS DRAWING IS COPYRIGHTED PROPERTY OF THE 3M COMPANY AND MAY NOT BE REPRODUCED, COPIED OR USED IN WHOLE OR IN PART OR DISCLOSED FOR OTHER THAN 3M AUTHORIZED PURPOSES.

DRAWN MTD 3/11/10

TITLE
OUTLINE DRAWING
CHASSIS 22"

CAD FORMAT AUTOCAD SHEET 1 OF 1

SIZE B DRAWING NO. 37645-OD REV 01

Downloaded from Elcodis.com electronic components distributor